International Standard 3093

INTERNATIONAL ORGANIZATION FOR STANDARDIZATION•МЕЖДУНАРОДНАЯ ОРГАНИЗАЦИЯ ПО СТАНДАРТИЗАЦИИ•ORGANISATION INTERNATIONALE DE NORMALISATION

Cereals — Determination of falling number

Céréales — Détermination de l'indice de chute

Second edition — 1982-02-15

iTeh STANDARD PREVIEW
(standards.iteh.ai)

ISO 3093:1982
https://standards.iteh.ai/catalog/standards/sist/6dd48ada-2fbe-4ef7-94ef-ba955d4b26e9/iso-3093-1982

UDC 633.1 : 577.154.087.5 **Ref. No. ISO 3093-1982 (E)**

Descriptors : agricultural products, cereal products, grains (food), tests, measurement, enzymatic activity.

Price based on 5 pages

Foreword

ISO (the International Organization for Standardization) is a worldwide federation of national standards institutes (ISO member bodies). The work of developing International Standards is carried out through ISO technical committees. Every member body interested in a subject for which a technical committee has been set up has the right to be represented on that committee. International organizations, governmental and non-governmental, in liaison with ISO, also take part in the work.

Draft International Standards adopted by the technical committees are circulated to the member bodies for approval before their acceptance as International Standards by the ISO Council.

iTeh STANDARD PREVIEW
(standards.iteh.ai)

International Standard ISO 3093 was developed by Technical Committee ISO/TC 34, *Agricultural food products*.

This second edition was submitted directly to the ISO Council, in accordance with clause 5.10.1 of part 1 of the Directives for the technical work of ISO. It cancels and replaces the first edition (i.e. ISO 3093-1974), which had been approved by the member bodies of the following countries :

ISO 3093:1982
https://standards.iteh.ai/catalog/standards/sist/6b149eda-2fbe-4ef7-94ef-ba955d4b26e9/iso-3093-1982

Austria	Germany, F. R.	Romania
Brazil	Hungary	South Africa, Rep. of
Bulgaria	India	Turkey
Canada	Ireland	United Kingdom
Czechoslovakia	Israel	USSR
Egypt, Arab Rep. of	Netherlands	Yugoslavia
France	Poland	

The member body of the following country had expressed disapproval of the document on technical grounds :

New Zealand

NOTE — This International Standard is based on standard No. 107 of the International Association for Cereal Chemistry (ICC).

© International Organization for Standardization, 1982 ●

Printed in Switzerland

Cereals — Determination of falling number

1 Scope

This International Standard specifies a method for the determination of the "falling number" of cereals, as a measure of alpha-amylase activity.

2 Field of application

The method is applicable to cereal grain, and in particular to wheat and rye and to their milled products of particle size in accordance with the requirements of 7.5. It is not used in the brewing industry at present.

iTeh STANDARD PREVIEW
(standards.iteh.ai)

3 References

ISO 712, *Cereals and cereal products — Determination of moisture content (Routine reference method).*

ISO 3093:1982
https://standards.iteh.ai/catalog/standards/sist/...-ba955d4b26e9/iso-3093-1982

ISO 950, *Cereals — Sampling (as grain).*

ISO 2170, *Cereals and pulses — Sampling of milled products.*

4 Definition

falling number : The total time, in seconds, starting from the immersion of a viscometer tube in boiling water, required to operate a viscometer stirrer in a specified manner and then to allow it to fall a predetermined distance through an aqueous gel prepared from flour or from the whole milled product of a cereal, contained in the viscometer tube and undergoing liquefaction.

5 Principle

Rapid gelatinization of a suspension of flour or of the whole milled product of the cereal in water, in a boiling water bath, and subsequent measurement of the liquefaction by alpha-amylase of the starch contained in the sample.

6 Reagent

6.1 Distilled water or water of at least equivalent purity.

7 Apparatus

7.1 Apparatus corresponding to the following description[1] or any other equivalent apparatus.

The equipment consists of

7.1.1 Water bath, 20 cm high and 15 cm in diameter, equipped with a lid with a viscometer tube holder, a clip to secure the viscometer tube after insertion and a condenser to reduce the escape of steam.

7.1.2 Electric heater, 600 W, the diameter of which does not exceed that of the water bath (7.1.1).

7.1.3 Metallic viscometer stirrer, consisting of a bar provided with two stops and, on its lower end, a wheel. The stirrer shall run smoothly in an ebonite plug, and its mass, without the plug, shall be 25 ± 0,05 g.

Figures 1 and 2 show schematically the viscometer stirrer and the wheel, together with their dimensions.

7.1.4 Precision cylindrical viscometer tubes of special glass and of the following dimensions : inner diameter 21 ± 0,02 mm, outer diameter 23,8 ± 0,25 mm, inner height 220 ± 0,3 mm.

7.1.5 Rubber stoppers for the viscometer tubes.

7.2 Pipette, of capacity 25 ± 0,2 ml.

7.3 Automatic counter with signals or, if this is not available, **chronometer** (stop clock), to obtain the correct stirring rhythm.

1) The International Organization for Standardization draws attention to the fact that it is claimed that this equipment forms the subject of a patent belonging to Falling Number AB, Norrlandsgatan 16, Stockholm (Sweden). Though this patent seems to cover the requirements as laid down in 7.1, ISO is not competent to judge its validity and its field of application. The patent holder has declared himself willing to make the licence available under reasonable conditions to all applicants throughout the world.

7.4 Balance.

7.5 Hammer mill[1] suitable for grinding a product having a moisture content of up to 30 %.

It is necessary to be able to adjust the mill in order to obtain a meal complying with the requirements of table 1.

Table 1 — Particle size requirements

Aperture size of sieve	Amount of meal passing through sieve
µm	%
710	100
500	95 to 100
210 to 200	80 or less

7.6 Sieve, of aperture size 800 µm.

8 Sampling

See ISO 950 or ISO 2170, as applicable.

iTeh STANDARD PREVIEW
(standards.iteh.ai)
ISO 3093:1982
https://standards.iteh.ai/catalog/standards/sist/6dd48ada-2fbe-4ef7-94ef-ba955d4b26e9/iso-3093-1982

9 Procedure

9.1 Preparation of the test sample

9.1.1 Grain sample

Remove dust and coarse impurities from the laboratory sample, then take about 300 g of grain.

A smaller sample, of about 200 g, though giving less reproducible results, may be used in routine control tests.

Grind the sample in the mill (7.5) carefully in order to avoid heating or over-loading.

Continue grinding for 30 to 40 s after the last of the sample has been fed into the mill. Bran particles up to 1 %, remaining on the sieve, may be discarded.

Mix the milled product thoroughly.

9.1.2 Flour sample

Sift the flour through the sieve (7.6) in order to break up lumps.

9.2 Moisture content of test sample

Determine the moisture content of the flour or milled product by the method described in ISO 712, before taking the test portion.

9.3 Test portion

9.3.1 Take as the test portion the mass, weighed to the nearest 0,05 g, specified in the second column of table 2.

This mass is calculated as a function of the moisture content so that, after the addition of 25 ml of water, the ratio of dry matter to total water (including the water from the test portion) is constant and such that, for a moisture content of 15,0 % (*m/m*), the nominal mass of the test portion is 7,00 g.

Table 2 — Mass of test portion as a function of moisture content

Moisture content of test sample	Mass of test portion	
	for a nominal mass of 7 g [at a moisture content of 15 % (*m/m*)]	for a nominal mass of 9 g [at a moisture content of 15 % (*m/m*)]
% (*m/m*)	g	g
9,0	6,40	8,20
9,2	6,45	8,25
9,4	6,45	8,25
9,6	6,45	8,30
9,8	6,50	8,30
10,0	6,50	8,35
10,2	6,55	8,35
10,4	6,55	8,40
10,6	6,55	8,40
10,8	6,60	8,45
11,0	6,60	8,45
11,2	6,60	8,50
11,4	6,65	8,50
11,6	6,65	8,55
11,8	6,70	8,55
12,0	6,70	8,60
12,2	6,70	8,60
12,4	6,75	8,65
12,6	6,75	8,65
12,8	6,80	8,70
13,0	6,80	8,70
13,2	6,80	8,75
13,4	6,85	8,80
13,6	6,85	8,80
13,8	6,90	8,85
14,0	6,90	8,85
14,2	6,90	8,90
14,4	6,95	8,90
14,6	6,95	8,95
14,8	7,00	8,95
15,0	7,00	9,00
15,2	7,00	9,05
15,4	7,05	9,05
15,6	7,05	9,10
15,8	7,10	9,10
16,0	7,10	9,15
16,2	7,15	9,20
16,4	7,15	9,20
16,6	7,15	9,25
16,8	7,20	9,25
17,0	7,20	9,30
17,2	7,25	9,35
17,4	7,25	9,35
17,6	7,30	9,40
17,8	7,30	9,40
18,0	7,30	9,45

1) Kamas Slago 200 A and Falling number type KT 120 hammer mills have been found to be suitable.

9.3.2 If it is desirable to obtain better differentiation of the values obtained from samples of very high alpha-amylase activity, it is possible to take a test portion corresponding to a nominal mass of 9,00 g at a moisture content of 15,0 % (*m/m*) (see the third column of table 2).

9.4 Determination

Fill the water bath (7.1.1) with distilled water to 2 to 3 cm below the top edge of the container. Bring the water to the boil and keep it boiling vigorously during the whole test period.

NOTE — The falling number is affected by the boiling point of the water, which is a function of atmospheric pressure. If the boiling point falls to as low as 97 °C, which may particularly occur at high altitudes, the figure for the falling number is about 10 % higher than the true value. Thus it is important to correct the temperature of the boiling water bath to 100 °C, for example by the addition of ethylene glycol or glycerol (see table 3).

Table 3 — Elevation of boiling point

Required temperature elevation °C	Quantity to added, % (*V/V*)	
	Ethylene glycol	Gylcerol
0,2	1,9	2,5
0,4	3,9	4,9
0,6	5,8	7,4
0,8	7,8	9,8
1,0	9,7	12,3
1,2	11,3	14,2
1,4	12,9	16,1
1,6	14,4	18,1
1,8	16,0	20,0
2,0	17,6	21,9

iTeh STANDARD PREVIEW
(standards.iteh.ai)
ISO 3093:1982
https://standards.iteh.ai/catalog/standards/sist/6dd48a6a-7fbe-4e47-94ef-ba9...3d4b26e9/iso-3093-1982

Transfer the test portion to the viscometer tube (7.1.4) and add 25 ml of the water (6.1) at 20 ± 5 °C using the pipette (7.2).

Immediately insert a rubber stopper (7.1.5) and shake vigorously by hand 20 times, or more if necessary, to obtain a homogeneous suspension.

Remove the stopper and place the stirrer (7.1.3) into the tube, scraping into the suspension any flour or milled product adhering to the walls of the tube.

Place the viscometer tube with the stirrer into the boiling water bath through the opening of the tube holder.

Start the automatic counter (7.3) as soon as the tube touches the false bottom of the water bath. Secure the tube and the ebonite plug with a revolving clamp.

Exactly 5 s after the immersion of the viscometer tube, start stirring the suspension by hand at the rate of two strokes per second, each stroke consisting of one upward and one downward movement (see 11.1).

At each stroke, the lower stop and the upper stop of the stirrer should touch the lower surface A of the ebonite plug and the bottom B of the upper section of the plug, respectively (see figure 1), thereby fixing the amplitude of the stroke.

After a total of 59 s, hold the stirrer at the higher position, with the lower stop in contact with the ebonite plug which is fixed to the viscometer tube by the revolving clamp. Release the stirrer exactly 60 s after starting the automatic counter (see 11.2).

The counter is automatically stopped at the moment that the lower edge of the upper stop of the stirrer, dropping by its own weight, arrives at the level C of the top of the ebonite stopper, and a sound signal is given (see 11.3).

Read the total time, in seconds, on the automatic counter.

9.5 Number of determinations

Carry out two determinations on the same test sample.

10 Expression of results

10.1 Method of calculation

10.1.1 Falling number

Take the total time, in seconds, starting from the immersion of the viscometer tube in the water bath until the moment that the lower surface of the upper stop of the stirrer arrives at level C at the top surface of the ebonite plug (see figure 1), as the "falling number".

The stirring time is thus included in the falling number.

Take as the result the arithmetic mean of the values obtained in the two determinations, provided that the requirement for repeatability (see 10.2) is fulfilled. Otherwise perform two new determinations.

10.1.2 Liquefaction number

It is possible to prepare mixtures of flour having a desired value for the falling number, after conversion of the falling number to a "liquefaction number" by the empirical formula

$$\text{Liquefaction number (LN)} = \frac{6\,000}{\text{Falling number} - 50}$$

where the number 6 000 is a constant, and the number 50 is approximately equal to the time, in seconds, required for the starch contained in the flour to gelatinize sufficiently to be susceptible to attack by enzymes.

NOTE — The formula only applies in the case of a test portion of 7 g.

10.2 Repeatability

The difference between the values obtained in the two determinations (see 9.5) shall not exceed 10 % of their mean value.

11 Notes on procedure

11.1 Stirring is the most important phase of the determination of "falling number". Great care shall be taken to stir with the correct rhythm as experience has shown that different rhythms may lead to considerable variations in results.

The risk of error can be reduced by using an automatic timer, which, by means of sound and light signals, indicates the correct rhythm. The method is highly simplified by the use of a magnetic stirrer. The use of a semi-automatic or a fully automated instrument is recommended.

11.2 Prior to starting the automatic counter, which gives two signals per second in order to facilitate the rhythm of stirring, the micro-switch for the measurement of time is turned into position beside the stirrer.

11.3 If a chronometer is used, it shall be stopped as soon as the stirrer has dropped by its own weight and the lower surface of the upper stop has arrived at the level of the upper surface of the ebonite plug.

12 Test report

The test report shall indicate the method used and the result obtained. It shall also mention all operating details not specified in this International Standard, or regarded as optional, as well as any circumstances which may have influenced the result.

The test report shall include all information necessary for complete identification of the sample.

iTeh STANDARD PREVIEW
(standards.iteh.ai)
ISO 3093:1982
https://standards.iteh.ai/catalog/standards/sist/6dd48ada-2fbe-4ef7-94ef-ba955d4b26e9/iso-3093-1982

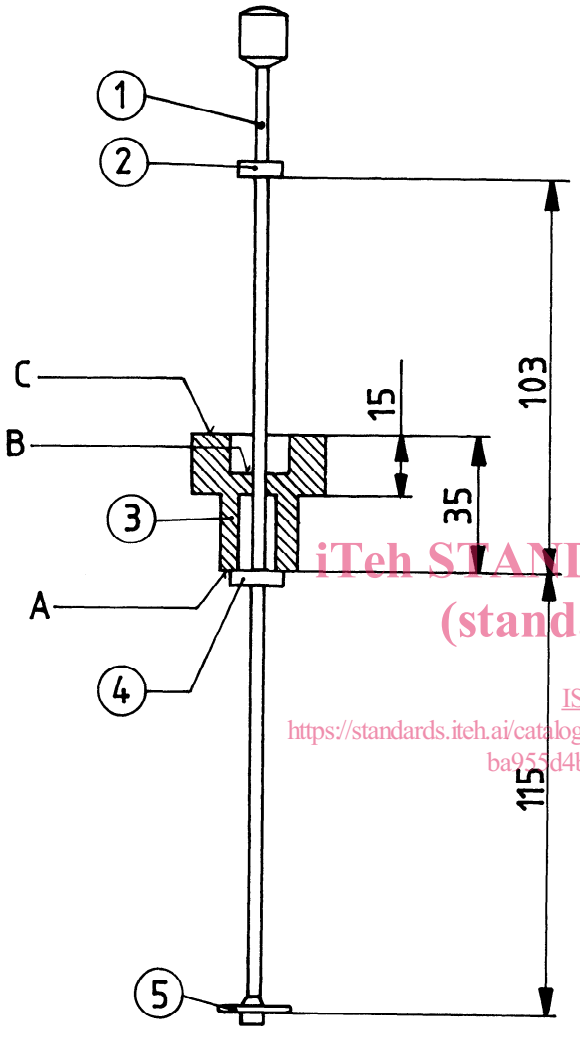

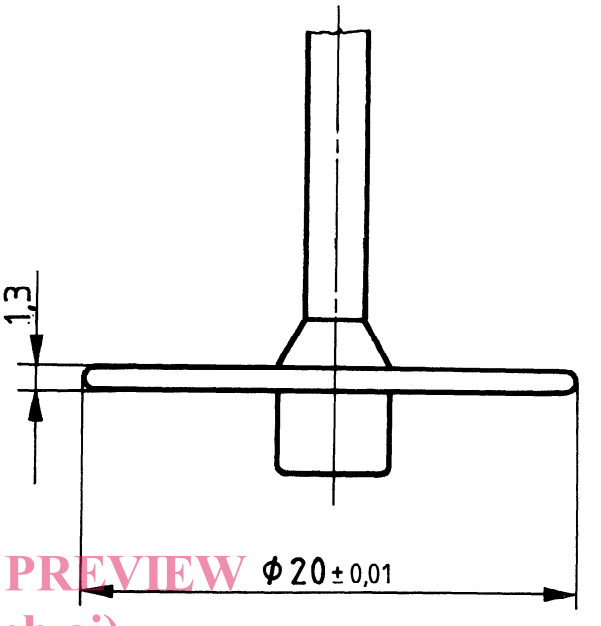

iTeh STANDARD PREVIEW
(standards.iteh.ai)
ISO 3093:1982
https://standards.iteh.ai/catalog/standards/sist/6dd48ada-2fbe-4ef7-94e1-ba955d4b26e9/iso-3093-1982

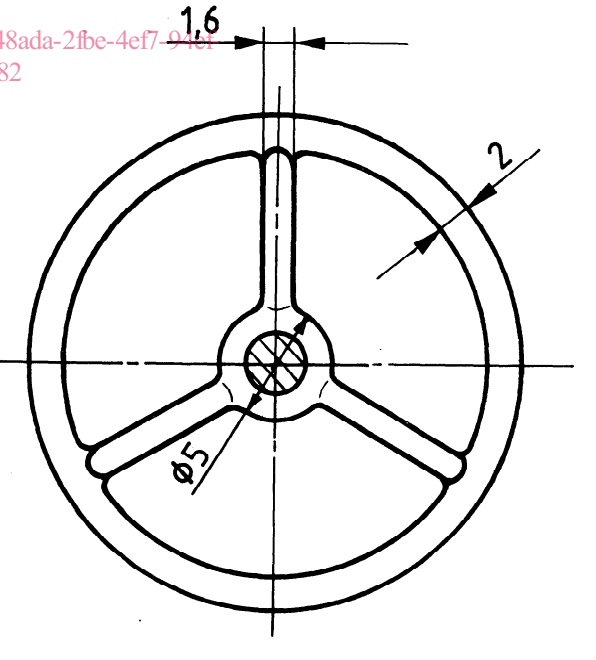

1 Bar of the stirrer
2 Upper stop on the stirrer
3 Ebonite plug
4 Lower stop on the stirrer
5 Wheel

Figure 1 — Diagram of the stirrer

Figure 2 — Diagram of the wheel of the stirrer

iTeh STANDARD PREVIEW
(standards.iteh.ai)

This page intentionally left blank

ISO 3093:1982
https://standards.iteh.ai/catalog/standards/sist/6dd48ada-2fbe-4ef7-94ef-ba955d4b26e9/iso-3093-1982