ISO/FDIS 11531:2022(E)

ISO TC 164/SC 2

~~Date: 2022-04-25~~

Secretariat: JISC

Metallic materials — Sheet and strip — Earing test

iTeh STANDARD PREVIEW
(standards.iteh.ai)
ISO/FDIS 11531
https://standards.iteh.ai/catalog/standards/sist/559cdf32-4d7f-4e86-9c0c-[illegible]/iso-fdis-11531

~~WD/CD/DIS/FDIS stage~~

~~**Warning for WDs and CDs**~~

~~This document is not an ISO International Standard. It is distributed for review and comment. It is subject to change without notice and may not be referred to as an International Standard.~~

~~Recipients of this draft are invited to submit, with their comments, notification of any relevant patent rights of which they are aware and to provide supporting documentation.~~

~~*A model manuscript of a draft International Standard (known as "The Rice Model") is available at https://www.iso.org/iso/model_document-rice_model.pdf*~~

Style Definition ...
Style Definition ...
Style Definition ...
Style Definition ...
Style Definition ...
Style Definition ...
Style Definition ...
Style Definition ...
Style Definition ...
Style Definition ...
Style Definition ...
Style Definition ...
Style Definition ...
Style Definition ...
Style Definition ...
Style Definition ...
Style Definition ...
Style Definition ...
Style Definition ...
Style Definition ...
Style Definition ...
Style Definition ...
Style Definition ...
Style Definition ...
Style Definition ...
Style Definition ...
Style Definition ...
Style Definition ...
Style Definition ...
Style Definition ...
Style Definition ...
Style Definition ...
Style Definition ...
Style Definition ...
Style Definition ...
Style Definition ...
Style Definition ...
Style Definition ...
Style Definition ...
Style Definition ...
Style Definition ...
Style Definition ...
Formatted ...
Formatted ...
Formatted ...
Formatted ...
Formatted ...
Formatted ...

© ISO 2022

All rights reserved. Unless otherwise specified, or required in the context of its implementation, no part of this publication may be reproduced or utilized otherwise in any form or by any means, electronic or mechanical, including photocopying, or posting on the internet or an intranet, without prior written permission. Permission can be requested from either ISO at the address below or ISO's member body in the country of the requester.

ISO copyright office

CP 401 • Ch. de Blandonnet 8

CH-1214 Vernier, Geneva

Phone: +41 22 749 01 11

Email: copyright@iso.org

Website: ~~www.iso.org~~www.iso.org

Published in Switzerland

iTeh STANDARD PREVIEW
(standards.iteh.ai)
ISO/FDIS 11531
https://standards.iteh.ai/catalog/standards/sist/5b9cdf32-4d7f-4c86-9c0e-f610be55146b/iso-fdis-11531

Formatted

Formatted: Font color: Blue

Formatted: std_publisher, Font color: Blue

Formatted: Font color: Blue

Formatted: std_docNumber, Font color: Blue

Formatted: Font color: Blue

Formatted: Font: 11 pt, Font color: Blue

Formatted: Font: 11 pt, Font color: Blue, English (United Kingdom)

Formatted: Font: 11 pt, Font color: Blue, English (United Kingdom)

Contents

Foreword iv
1 Scope 1
2 Normative references 1
3 Terms and definitions 1
4 Symbols and designations 1
5 Principle 4
6 Test equipment 4
7 Test piece 5
8 Procedure 5
9 Interpretation of results 6
10 Test report 6

iTeh STANDARD PREVIEW
(standards.iteh.ai)
ISO/FDIS 11531
https://standards.iteh.ai/catalog/standards/sist/5b9cdf32-4d7f-4c86-9c0e-f610be55146b/iso-fdis-11531

Formatted: Space Before: 48 pt, Don't adjust space between Latin and Asian text, Don't adjust space between Asian text and numbers

Formatted: Don't adjust space between Latin and Asian text, Don't adjust space between Asian text and numbers

Formatted: Don't adjust space between Latin and Asian text, Don't adjust space between Asian text and numbers

© ISO 2022 – All rights reserved

Foreword

ISO (the International Organization for Standardization) is a worldwide federation of national standards bodies (ISO member bodies). The work of preparing International Standards is normally carried out through ISO technical committees. Each member body interested in a subject for which a technical committee has been established has the right to be represented on that committee. International organizations, governmental and non-governmental, in liaison with ISO, also take part in the work. ISO collaborates closely with the International Electrotechnical Commission (IEC) on all matters of electrotechnical standardization.

The procedures used to develop this document and those intended for its further maintenance are described in the ISO/IEC Directives, Part 1. In particular, the different approval criteria needed for the different types of ISO documents should be noted. This document was drafted in accordance with the editorial rules of the ISO/IEC Directives, Part 2 (see www.iso.org/directives).

Attention is drawn to the possibility that some of the elements of this document may be the subject of patent rights. ISO shall not be held responsible for identifying any or all such patent rights. Details of any patent rights identified during the development of the document will be in the Introduction and/or on the ISO list of patent declarations received (see www.iso.org/patents).

Any trade name used in this document is information given for the convenience of users and does not constitute an endorsement.

For an explanation of the voluntary nature of standards, the meaning of ISO specific terms and expressions related to conformity assessment, as well as information about ISO's adherence to the World Trade Organization (WTO) principles in the Technical Barriers to Trade (TBT), see www.iso.org/iso/foreword.html.

This document was prepared by Technical Committee ISO/TC 164, *Mechanical testing of metals*, Subcommittee SC 2, *Ductility testing*.

This third edition cancels and replaces the second edition (ISO 11531:2015), of which it constitutes a minor revision.

The main changes compared to the previous edition are as follows:

— Clause 2 "Normative reference" and clause Clause 3 "Terms and definitions" have been added;

— The previous clause Clause 2 "Symbols and their meanings" has been modified to Clause 4 "Symbols and designations";

— the title of Table1Table 1 has been modified to "Symbols and designations";

— In figure Figure 2, "5 test piece" has been added.

— Clause 9 has been modified editorially and divided into two part of 9.1 and 9.2.

Formatted: Font color: Auto
Formatted: Foreword Title
Formatted ...
Formatted: Font color: Auto, English (United States)
Formatted: Font color: Auto, English (United States)
Formatted: Font color: Auto, English (United States)
Formatted: Font color: Auto, English (United States)
Formatted: Font color: Auto, English (United States)
Formatted: Font color: Auto
Formatted: Don't adjust space between Latin and Asian text, Don't adjust space between Asian text and numbers
Formatted ...
Formatted ...
Formatted: List Continue 1, Don't adjust space between Latin and Asian text, Don't adjust space between Asian text and numbers, Tab stops: 0.7 cm, Left + 1.4 cm, Left + 2.1 cm, Left + 2.8 cm, Left + 3.5 cm, Left + 4.2 cm, Left + 4.9 cm, Left + 5.6 cm, Left + 6.3 cm, Left + 7 cm, Left
Formatted ...
Formatted ...
Formatted ...
Formatted ...
Formatted ...

Any feedback or questions on this document should be directed to the user's national standards body. A complete listing of these bodies can be found at www.iso.org/members.htmlwww.iso.org/members.html.

Formatted: Font color: Auto, English (United States)

Formatted: Font color: Auto, English (United States)

Formatted: Font color: Auto

Formatted: Foreword Text, Don't adjust space between Latin and Asian text, Don't adjust space between Asian text and numbers

iTeh STANDARD PREVIEW
(standards.iteh.ai)
ISO/FDIS 11531
https://standards.iteh.ai/catalog/standards/sist/5b9cdf32-4d7f-4c86-9c0e-f610be55146b/iso-fdis-11531

© ISO 2022 – All rights reserved

© ISO 2022 – All rights reserved

iTeh STANDARD PREVIEW
(standards.iteh.ai)
ISO/FDIS 11531
https://standards.iteh.ai/catalog/standards/sist/5b9cdf32-4d7f-4c86-9c0e-f610be55146b/iso-fdis-11531

Metallic materials — Sheet and strip — Earing test

1 Scope

This document specifies a method for determining the ear height of metal sheet and strip of nominal thickness from 0,1 mm to 3 mm after deep drawing.

2 Normative references

There are no normative references in this document.

3 Terms and definitions

No terms and definitions are listed in this document.

ISO and IEC maintain terminology databases for use in standardization at the following addresses:

— ISO Online browsing platform: available at ~~https://www.iso.org/obp~~https://www.iso.org/obp

— IEC Electropedia: available at ~~https://www.electropedia.org/~~https://www.electropedia.org/

4 Symbols and designations

The symbols and designations used in the earing test are given in Table 1 and illustrated in Figure 1 and Figure 2.

Preview (standards.iteh.ai) ISO/FDIS 11531 https://standards.iteh.ai/catalog/standards/sist/5b9edd52-4d71-4e86-9ed6-11531

© ISO 2022 – All rights reserved

Formatted: Different first page header
Formatted: Font color: Blue
Formatted: Font: Bold, Font color: Blue
Formatted: Space Before: 20 pt, Don't adjust space between Latin and Asian text, Don't adjust space between Asian text and numbers
Formatted: Font color: Auto
Formatted: Don't adjust space between Latin and Asian text, Don't adjust space between Asian text and numbers
Formatted: Font color: Auto
Formatted: Font color: Auto
Formatted: Font color: Auto, English (United States)
Formatted: Font: Times New Roman, 12 pt, Font color: Auto, English (United States)
Formatted: List Continue 1, No bullets or numbering, Don't keep with next
Formatted: Font color: Auto, English (United States)
Formatted: Hyperlink, No underline, Font color: Auto, English (United States)
Formatted: Font color: Auto, English (United States)
Formatted: Hyperlink, No underline, Font color: Auto, English (United States)
Formatted: Don't adjust space between Latin and Asian text, Don't adjust space between Asian text and numbers
Formatted: Font color: Auto
Formatted: cite_tbl
Formatted: cite_tbl
Formatted: cite_fig, Font: Not Bold
Formatted: cite_fig, Font: Not Bold
Formatted: cite_fig, Font: Not Bold
Formatted: cite_fig, Font: Not Bold

Table 1 — Symbols and designations

Symbol	Designations	Unit
a	Thickness of test piece	mm
d_1	Diameter of punch	mm
R_1	Corner radius of punch	mm
d_2	Inside diameter of die	mm
R_2	Corner radius of die	mm
d_b	Diameter of circular blank	mm
h_t	Distance between outside bottom of cup and any ear peak	mm
$\bar{h}_t$	Mean value of h_t	mm
$h_{t,max}$	Maximum value of h_t	mm
h_v	Distance between outside bottom of cup and any ear valley	mm
$\bar{h}_v$	Mean value of h_v	mm
$h_{v,min}$	Minimum value of h_v	mm
$\bar{h}_e$	Mean ear height	mm
$h_{e,max}$	Maximum ear height	mm
$N_{ear\ peaks}$	Number of ear peaks	—
$N_{ear\ valleys}$	Number of ear valleys	—
Z	Ear height expressed as a percentage	%
R_a	Surface roughness parameter: arithmetic mean deviation of profile	µm

iTeh STANDARD PREVIEW
(standards.iteh.ai)
ISO/FDIS 11531
https://standards.iteh.ai/catalog/standards/sist/5b9cdf22-4d7f-4c86-9c0e-...46b/iso-fdis-11531

© ISO 2022 – All rights reserved
2
© ISO 2022 – All rights reserved

Formatted: Right, Space After: 36 pt, Line spacing: Exactly 12 pt

Formatted: Font: 12 pt

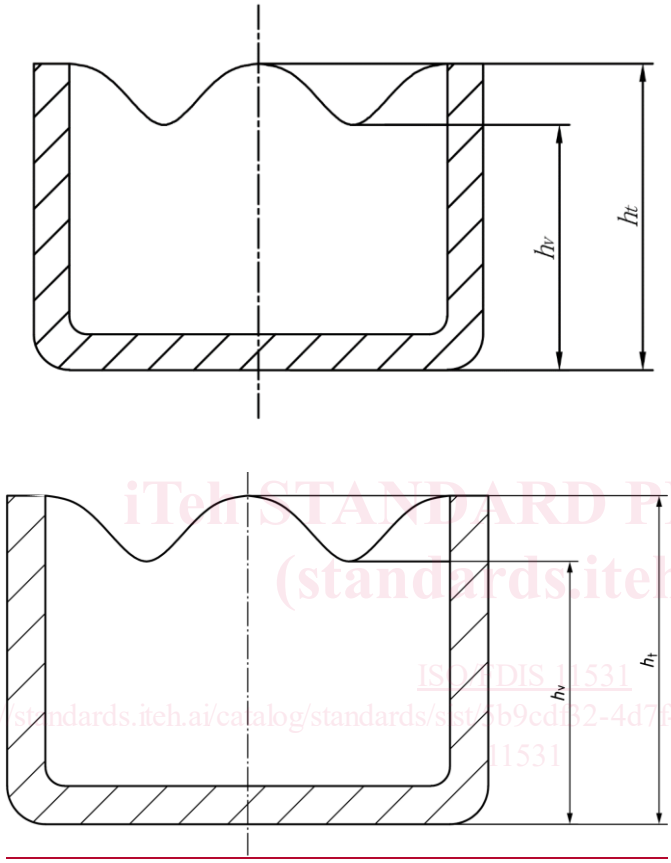

iTeh STANDARD PREVIEW
(standards.iteh.ai)
ISO/FDIS 11531
https://standards.iteh.ai/catalog/standards/sist/6b9cdf32-4d7f-4c86-9c0e-f610be55146b/iso-fdis-11531

~~Figure 1 —~~ Figure 1 — Schematic section of cup

Formatted: Figure title, Level 1, Don't adjust space between Latin and Asian text, Don't adjust space between Asian text and numbers

~~© ISO 2022 – All rights reserved~~

© ISO 2022 – All rights reserved

Formatted: Space After: 36 pt, Line spacing: Exactly 12 pt

Formatted: Font: 12 pt

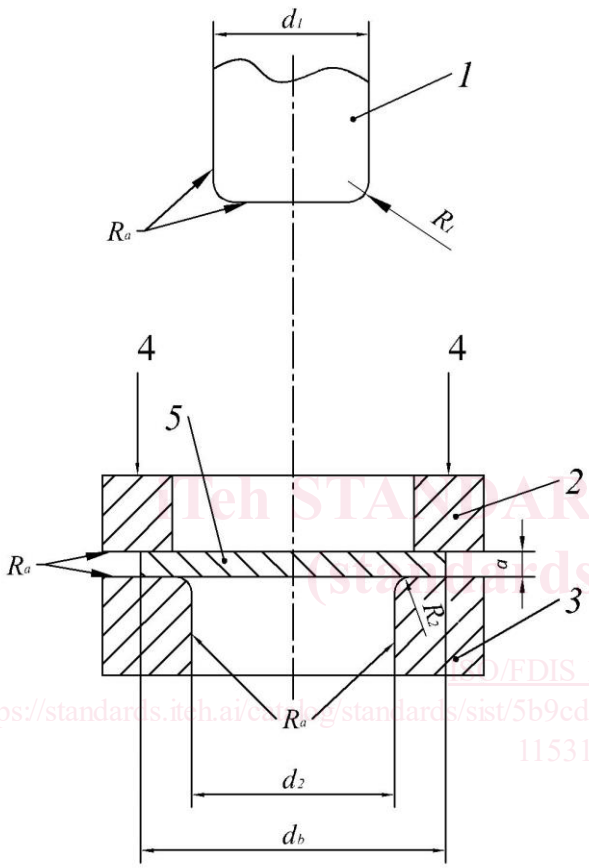

iTeh STANDARD PREVIEW
(standards.iteh.ai)
ISO/FDIS 11531
https://standards.iteh.ai/catalog/standards/sist/5b9cdf32-4d7f-4c86-9c0e-f610be55146b/iso-fdis-11531

© ISO 2022 – All rights reserved

4
© ISO 2022 – All rights reserved