ISO/FDIS 4545-1

ISO/TC 164/SC 3

~~Date: 2022-09-21~~

~~ISO 4545-1:2022(E)~~

~~ISO/TC 164/SC 3/WG 5~~

Secretariat: DIN

Date: 2023-05-26

Metallic materials — Knoop hardness test —

Part 1: Test method

Matériaux métalliques — Essai de dureté Knoop —

Partie 1: Méthode d'essai

iTeh Standards
(https://standards.iteh.ai)
Document Preview
ISO 4545-1:2023
https://standards.iteh.ai/catalog/standards/iso/54463d90-7ba8-4940-9047-665c5b3bda64/iso-4545-1-2023

FDIS stage

Edited DIS - MUST BE USED FOR FINAL DRAFT

© ISO ~~2022~~2023

All rights reserved. Unless otherwise specified, or required in the context of its implementation, no part of this publication may be reproduced or utilized otherwise in any form or by any means, electronic or mechanical, including photocopying, or posting on the internet or an intranet, without prior written permission. Permission can be requested from either ISO at the address below or ISO's member body in the country of the requester.

ISO copyright office
CP 401 • Ch. de Blandonnet 8
CH-1214 Vernier, Geneva
Phone: + 41 22 749 01 11

~~Fax: +41 22 749 09 47~~

~~Email~~E-mail: copyright@iso.org
Website: www.iso.org

Published in Switzerland

iTeh Standards
(https://standards.iteh.ai)
Document Preview

ISO 4545-1:2023
https://standards.iteh.ai/catalog/standards/iso/54463d90-7ba8-4940-9047-665c5b3bda64/iso-4545-1-2023

~~© ISO 2022 – All rights reserved~~

© ISO 2023 – All rights reserved
Edited DIS - MUST BE USED FOR FINAL DRAFT

Contents ~~Page~~

Foreword v
1 Scope 1
2 Normative references 1
3 Terms and definitions 1
4 Symbols and designations 2
4.1 Symbols and designations used in this document 2
4.2 Designation of hardness number 2
5 Principle 3
6 Testing machine 4
6.1 Testing machine 4
6.2 Indenter 4
6.3 Diagonal measuring system 5
7 Test piece 5
7.1 Test surface 5
7.2 Preparation 5
7.3 Thickness 5
7.4 Support of unstable test pieces 6
7.5 Metallic and other inorganic coatings 6
8 Procedure 6
8.1 Test temperature 6
8.2 Test force 6
8.3 Periodic verification 7
8.4 Test piece support 7
8.5 Focus on test surface 7
8.6 Test force application 7
8.7 Prevention of the effect of shock or vibration 7
8.8 Minimum distance between adjacent indentations 7
8.9 Measurement of diagonal length 9
8.10 Calculation of hardness value 9
9 Uncertainty of the results 9
10 Test report 9
Annex A (normative) Procedure for periodic checking of the testing machine, diagonal measuring system and the indenter by the user 11
Annex B (informative) Uncertainty of the measured hardness values 13

iTeh Standards
(https://standards.iteh.ai)
Document Preview
ISO 4545-1:2023
https://standards.iteh.ai/catalog/standards/iso/54463d90-7ba8-4940-9047-665c5b3bda64/iso-4545-1-2023

© ISO 2023 – All rights reserved

~~© ISO 2022 – All rights reserved~~

Annex C (informative) Knoop hardness measurement traceability 20
Annex D (informative) CCM — Working group on hardness 24
Annex E (informative) Adjustment of Köhler illumination systems 25
Annex F (normative) Determining the Knoop hardness of metallic and other inorganic coatings 26
Bibliography 31

iTeh Standards
(https://standards.iteh.ai)
Document Preview

ISO 4545-1:2023
https://standards.iteh.ai/catalog/standards/iso/54463d90-7ba8-4940-9047-665c5b3bda64/iso-4545-1-2023

~~© ISO 2022 – All rights reserved~~

© ISO 2023 – All rights reserved
Edited DIS - MUST BE USED FOR FINAL DRAFT

Foreword

ISO (the International Organization for Standardization) is a worldwide federation of national standards bodies (ISO member bodies). The work of preparing International Standards is normally carried out through ISO technical committees. Each member body interested in a subject for which a technical committee has been established has the right to be represented on that committee. International organizations, governmental and non-governmental, in liaison with ISO, also take part in the work. ISO collaborates closely with the International Electrotechnical Commission (IEC) on all matters of electrotechnical standardization.

The procedures used to develop this document and those intended for its further maintenance are described in the ISO/IEC Directives, Part 1. In particular the different approval criteria needed for the different types of ISO documents should be noted. This document was drafted in accordance with the editorial rules of the ISO/IEC Directives, Part 2 (see www.iso.org/directives).

Attention is drawn to the possibility that some of the elements of this document may be the subject of patent rights. ISO shall not be held responsible for identifying any or all such patent rights. Details of any patent rights identified during the development of the document will be in the Introduction and/or on the ISO list of patent declarations received (see www.iso.org/patents).

Any trade name used in this document is information given for the convenience of users and does not constitute an endorsement.

For an explanation on the voluntary nature of standards, the meaning of ISO specific terms and expressions related to conformity assessment, as well as information about ISO's adherence to the World Trade Organization (WTO) principles in the Technical Barriers to Trade (TBT) see the following URL: www.iso.org/iso/foreword.html.

This document was prepared by Technical Committee ISO/TC 164, *Mechanical testing of metals*, Subcommittee SC 3, *Hardness testing*, in collaboration with the European Committee for Standardization (CEN) Technical Committee CEN/TC 459, ECISS - European Committee for Iron and Steel Standardization, in accordance with the Agreement on technical cooperation between ISO and CEN (Vienna Agreement).

This third edition ~~cancels and replaces the second edition (~~of ISO 4545-~~-~~1:~~2017), and,~~ together with ISO 6507-1:2023, cancels and replaces ~~the second edition (~~ISO 4516:2002~~),~~, ISO 4545-1:2017 and ISO 6507-1:2018, which ~~has~~have been technically revised.

The main changes are as follows:

— ~~—~~Scope revised to include testing on metallic coatings and other inorganic coatings;

— ~~—~~added subclause 7.5~~clause 7.5 Metallic~~ on metallic and other inorganic coatings;

— ~~—~~added Annex F~~Annex F~~ to cover coatings specific requirements;

— ~~—~~updated references.

A list of all parts in the ISO 4545 series can be found on the ISO website.

© ISO 2023 – All rights reserved

~~© ISO 2022 – All rights reserved~~

Any feedback or questions on this document should be directed to the user's national standards body. A complete listing of these bodies can be found at www.iso.org/members.html.

iTeh Standards
(https://standards.iteh.ai)
Document Preview

ISO 4545-1:2023
https://standards.iteh.ai/catalog/standards/iso/54463d90-7ba8-4940-9047-665c5b3bda64/iso-4545-1-2023

~~© ISO 2022 – All rights reserved~~

© ISO 2023 – All rights reserved

Edited DIS - MUST BE USED FOR FINAL DRAFT

Metallic materials — Knoop hardness test — —

Part 1:
Test method

1 Scope

This document specifies the Knoop hardness test method for metallic materials for test forces from 0,009 807 N to 19,613 N.

This document specifies Knoop hardness tests for length of the long diagonal ≥0,020 mm. Using this method to determine the Knoop hardness from smaller indentations is outside the scope of this document as results would suffer from large uncertainties due to the limitations of optical measurement and imperfections in tip geometry.

The Knoop hardness test specified in this document is also applicable for metallic and other inorganic coatings including electrodeposited coatings, autocatalytic coatings, sprayed coatings and anodic coatings on aluminium. This document is applicable to measurements normal to the coated surface and to measurements on cross-sections, provided that the characteristics of the coating (smoothness, thickness, etc.) permit accurate readings of the diagonal of the indentation. This document is not applicable for coatings with thickness less than 0,007 mm when testing normal to the coating surface. This document is not applicable for coatings with thickness less than 0,020 mm when testing a cross-section of the coating. ISO 14577-1 can be used for the determination of hardness from smaller indentations.

A periodic verification method is specified for routine checking of the testing machine in service by the user.

iTeh Standards
(https://standards.iteh.ai)
Document Preview
ISO 4545-1:2023
https://standards.iteh.ai/catalog/standards/iso/54463d90-7ba8-4940-9047-665c5b3bda64/iso-4545-1-2023

2 Normative references

The following documents are referred to in the text in such a way that some or all of their content constitutes requirements of this document. For dated references, only the edition cited applies. For undated references, the latest edition of the referenced document (including any amendments) applies.

ISO 4545-2:2017, *Metallic materials — Knoop hardness test — Part 2: Verification and calibration of testing machines*

ISO 4545-3:2017, *Metallic materials — Knoop hardness test — Part 3: Calibration of reference blocks*

3 Terms and definitions

No terms and definitions are listed in this document.

ISO and IEC maintain terminology databases for use in standardization at the following addresses:

— ISO Online browsing platform: available at https://www.iso.org/obp

— IEC Electropedia: available at https://www.electropedia.org/

© ISO 2022 – All rights reserved

4 Symbols and designations

4.1 Symbols and designations used in this document

See Table 1~~Table 1~~ and Figures 1~~Figures 1~~ and 2~~2~~..

Table 1 — Symbols and designations

Symbol	Designation
F	Test force, in newtons (N)
d	Length of the long diagonal, in millimetres
d_s	Length of the short diagonal, in millimetres
α	Angle between the opposite edges of the long diagonal at the vertex of the diamond pyramid indenter (nominally 172,5°) (see Figure 1~~Figure 1)~~)
β	Angle between the opposite edges of the short diagonal at the vertex of the diamond pyramid (nominally 130°) (see Figure 1~~Figure 1)~~)
V	Magnification of the measuring system
c	Indenter constant, relating projected area of the indentation to the square of the length of the long diagonal Indenter constant,~~,~~ $c = \frac{\tan\frac{\beta}{2}}{2\tan\frac{\alpha}{2}}$, for nominal angles α and β, c is approximately 0,070 28
HK	Knoop hardness $= \frac{\text{Test force (kgf)}}{\text{Projected area of indentation (mm}^2\text{)}}$ $= \frac{1}{g_n} \times \frac{\text{Test force (N)}}{\text{Projected area of indentation (mm}^2\text{)}}$ $= \frac{1}{g_n} \times \frac{F}{cd^2}$ For the nominal indenter constant $c \approx 0{,}070\ 28$, Knoop hardness $\approx 1{,}451 \times \frac{F}{d^2}$
To reduce uncertainty, the Knoop hardness can be calculated using the actual indenter angles α and β. NOTE Standard acceleration due to gravity, g_n = 9,806 65 m/s², which is the conversion factor from kgf to N.	

4.2 Designation of hardness number

Knoop hardness, HK, is designated as shown in the following example.

iTeh Standards
(https://standards.iteh.ai)
Document Preview
ISO 4545-1:2023
https://standards.iteh.ai/catalog/standards/iso/54463d90-7ba8-4940-9047-665c5b3bda64/iso-4545-1-2023

~~© ISO 2022 – All rights reserved~~

© ISO 2023 – All rights reserved

Edited DIS - MUST BE USED FOR FINAL DRAFT

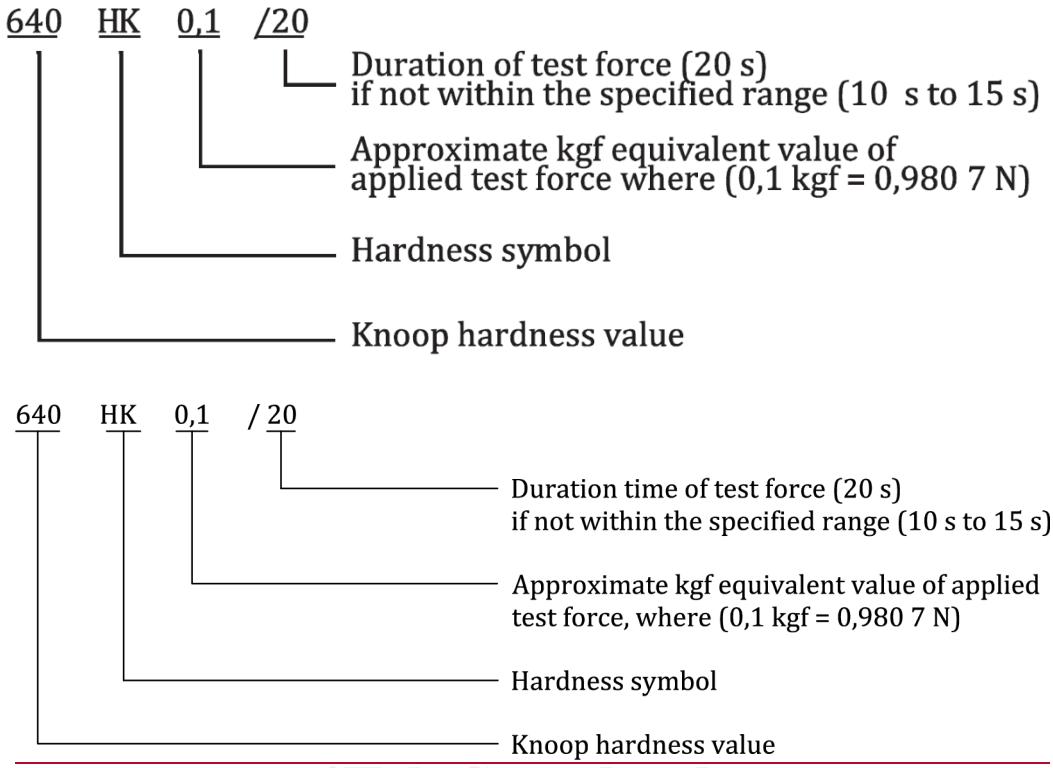

5 Principle

A diamond indenter, in the form of a rhombic-based pyramid with angles, α and β, between opposite edges respectively equal to 172,5° and 130° at the vertex, is forced into the surface of a test piece followed by measurement of the long diagonal, d, of the indentation remaining on the surface after removal of the test force, F (see Figures 1~~Figures 1~~ and 2~~2~~).).

iTeh Standards
(https://standards.iteh.ai)
Document Preview
ISO 4545-1:2023
https://standards.iteh.ai/catalog/standards/iso/54463d90-7ba8-4940-9047-665c5b3bda64/iso-4545-1-2023

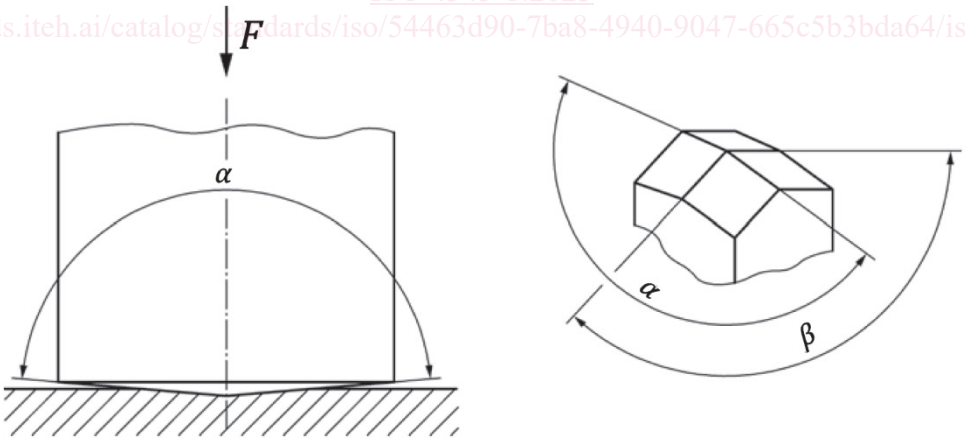

© ISO 2023 – All rights reserved

~~© ISO 2022 – All rights reserved~~

Edited DIS - MUST BE USED FOR FINAL DRAFT

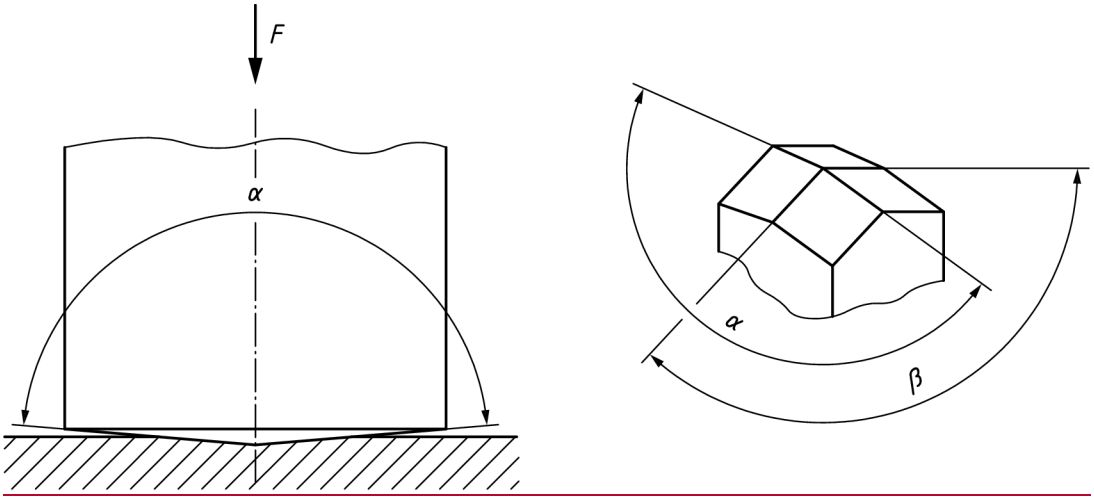

Figure 1 — Principle of the test and indenter geometry

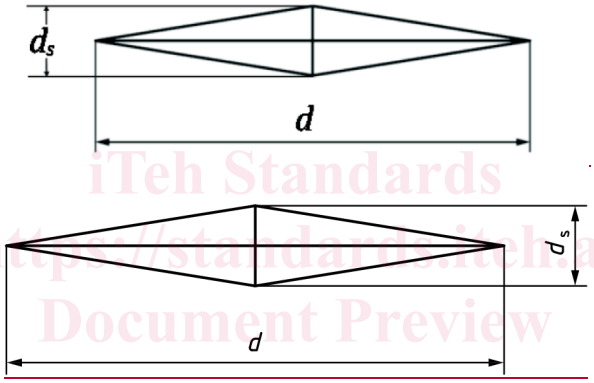

iTeh Standards
(https://standards.iteh.ai)
Document Preview
ISO 4545-1:2023
https://standards.iteh.ai/catalog/standards/iso/54463d90-7ba8-4940-9047-665c5b3bda64/iso-4545-1-2023

Figure 2 — Knoop indentation

The Knoop hardness is proportional to the quotient obtained by dividing the test force by the projected area of the indentation, which is assumed to be a rhombic-based pyramid, and having at the vertex the same angles as the indenter.

NOTE As applicable, this test document has adopted hardness test parameters as defined by the working group on hardness (CCM-WGH) under the framework of the International Committee of Weights and Measures (CIPM) Consultative Committee for Mass and Related Quantities (CCM) (see Annex D~~Annex D~~).).

6 Testing machine

6.1 Testing machine

The testing machine shall be capable of applying a predetermined force or forces within the desired range of test forces, in accordance with ISO 4545-~~-~~2.

6.2 Indenter

The indenter shall be a diamond in the shape of a rhombic-based pyramid, as specified in ISO 4545-~~-~~2.

~~© ISO 2022 – All rights reserved~~

© ISO 2023 – All rights reserved
Edited DIS - MUST BE USED FOR FINAL DRAFT

6.3 Diagonal measuring system

The diagonal measuring system shall satisfy the requirements in ISO 4545-~~-~~2.

Magnifications should be provided so that the diagonal can be enlarged to greater than 25 % but less than 75 % of the maximum possible optical field of view. Many objective lenses are non-linear towards the edge of the field of view.

NOTE A diagonal measuring system using a camera for measurement can use 100 % of the camera's field of view, provided it is designed to consider field of view limitations of the optical system.

The resolution required of the diagonal measuring system depends on the size of the smallest indentation to be measured, and shall be in accordance with Table 2~~Table 2. In.~~ When determining the resolution of the measuring system, the resolution of the microscope optics, the digital resolution of the measuring scale and the step-size of any stage movement, where applicable, should be taken into account.

Table 2 — Resolution of the measuring system

Diagonal length d mm	**Resolution of the measuring system**
$0{,}020 \leq d < 0{,}080$	0,000 4 mm
$0{,}080 \leq d$	0,5 % of d

7 Test piece

iTeh Standards
(https://standards.iteh.ai)
Document Preview

7.1 Test ~~Surface~~surface

The test shall be carried out on a polished surface, which is smooth and even, free from oxide scale and foreign matter and, in particular, free from lubricants, unless otherwise specified in product standards. The finish of the surface shall permit accurate determination of the diagonal length of the indentation.

ISO 4545-1:2023
https://standards.iteh.ai/catalog/standards/iso/54463d90-7ba8-4940-9047-665c5b3bda64/iso-4545-1-2023

7.2 Preparation

Surface preparation shall be carried out in such a way as to prevent surface damage, or alteration of the surface hardness due to excessive heating or cold-working.

Due to the small depth of Knoop hardness indentations, it is essential that special precautions be taken during preparation. It is recommended to use a polishing/electropolishing technique that is adapted to the material to be measured.

7.3 Thickness

The thickness of the test piece, or of the layer under test, shall be at least 1/3 times the length of the long diagonal length of the indentation. No deformation shall be visible at the back of the test piece after the test.

NOTE The depth of the indentation is approximately 1/30 of the long diagonal length (0,033 d).

© ISO 2023 – All rights reserved

~~© ISO 2022 – All rights reserved~~

Edited DIS - MUST BE USED FOR FINAL DRAFT