ISO/~~TC 164/SC 3~~

~~Date: 2022-09-16~~

~~ISO~~ FDIS 6507-1:~~2022~~2023(E)

ISO/TC 164/SC 3/WG 5

Secretariat: DIN

Date: 2023-05-15

Metallic materials — Vickers hardness test — Part 1: Test method

Matériaux métalliques — Essai de dureté Vickers— Partie 1: Méthode d'essai

Style Definition: Heading 1: Indent: Left: 0 pt, First line: 0 pt, Tab stops: Not at 21.6 pt

Style Definition: Heading 2: Font: Bold, Tab stops: Not at 18 pt

Style Definition: Heading 3: Font: Bold

Style Definition: Heading 4: Font: Bold

Style Definition: Heading 5: Font: Bold

Style Definition: Heading 6: Font: Bold

Style Definition: ANNEX

Style Definition: Bibliography1: No bullets or numbering, Tab stops: Not at 33 pt

Style Definition: AMEND Terms Heading: Font: Bold

Style Definition: AMEND Heading 1 Unnumbered: Font: Bold

Style Definition: IneraTableMultiPar: Font: Bold, French (Switzerland), Don't adjust space between Latin and Asian text, Don't adjust space between Asian text and numbers

Formatted: Don't adjust space between Latin and Asian text, Don't adjust space between Asian text and numbers

Formatted: Font: Bold

iTeh Standards
(https://standards.iteh.ai)
Document Preview

ISO 6507-1
https://standards.iteh.ai/catalog/standards/sist/f8e3556f-0913-498f-b00c-a6a8adde5e1f/iso-6507-1

Edited DIS - MUST BE USED FOR FINAL DRAFT

© ISO ~~2022~~2023

All rights reserved. Unless otherwise specified, or required in the context of its implementation, no part of this publication may be reproduced or utilized otherwise in any form or by any means, electronic or mechanical, including photocopying, or posting on the internet or an intranet, without prior written permission. Permission can be requested from either ISO at the address below or ISO's member body in the country of the requester.

ISO copyright office

CP 401 • Ch. de Blandonnet 8

CH-1214 Vernier, Geneva

Phone: +41 22 749 01 11

Email: copyright@iso.org

Website: ~~www.iso.org~~www.iso.org

Published in Switzerland

iTeh Standards
(https://standards.iteh.ai)
Document Preview

ISO 6507-1
https://standards.iteh.ai/catalog/standards/sist/f8e3556f-0913-498f-b00c-a6a8adde5e1f/iso-6507-1

Edited DIS - MUST BE USED FOR FINAL DRAFT

Formatted: English (United Kingdom)
Formatted: English (United Kingdom)
Formatted: English (United Kingdom)
Formatted: Pattern: Clear
Formatted: English (United Kingdom)
Formatted: English (United Kingdom)

Contents Page

Foreword 7
1 Scope 1
2 Normative references 1
3 Terms and definitions 2
4 Symbols and designations 2
4.1 Symbols and designations used in this document 2
4.2 Designation of hardness number 3
5 Principle 4
6 Testing machine 5
6.1 Testing machine 5
6.2 Indenter 5
6.3 Diagonal measuring system 5
7 Test piece 6
7.1 Test surface 6
7.2 Preparation 6
7.3 Thickness 6
7.4 Tests on curved surfaces 6
7.5 Support of unstable test pieces 6
7.6 Metallic and other inorganic coatings 6
8 Procedure 7
8.1 Test temperature 7
8.2 Test force 7
8.3 Periodic verification 7
8.4 Test piece support and orientation 7
8.5 Focus on test surface 8
8.6 Test force application 8
8.7 Prevention of the effect of shock or vibration 8
8.8 Minimum distance between adjacent indentations 8
8.9 Measurement of the diagonal length 9
8.10 Calculation of hardness value 10
9 Uncertainty of the results 10
10 Test report 10
Annex A (normative) Minimum thickness of the test piece in relation to the test force and hardness 12
Annex B (normative) Tables of correction factors for use in tests made on curved surfaces 16
Annex C (normative) Procedure for periodic checking of the testing machine, diagonal measuring system and indenter by the user 21
Annex D (informative) Uncertainty of the measured hardness values 23
Annex E (informative) Vickers hardness measurement traceability 31
Annex F (informative) CCM — Working group on hardness 35
Annex G (informative) Adjustment of Köhler illumination systems 36

iTeh Standards
(https://standards.iteh.ai)
Document Preview
ISO 6507-1:2023
https://standards.iteh.ai/catalog/standards/sist/f8e3556f-0915-498f-b0fc-a6a8adde5e1f/iso-6507-1

© ISO 2023 – All rights reserved

Formatted: English (United Kingdom)
Formatted: English (United Kingdom)
Formatted: English (United Kingdom)

~~Annex H (normative) Determining the Vickers hardness of metallic and other inorganic coatings~~ ... 37
~~Bibliography~~ ... 43
Foreword ... vi
1 Scope ... 1
Table 1 — Ranges of test force ... 1
2 Normative references ... 1
3 Terms and definitions ... 2
4 Symbols and designations ... 2
4.1 Symbols and designations used in this document ... 2
Table 2 — Symbols and designations ... 3
4.2 Designation of hardness number ... 3
5 Principle ... 4
Figure 1 — Principle of the test, geometry of indenter and Vickers indentation ... 5
6 Testing machine ... 5
6.1 Testing machine ... 5
6.2 Indenter ... 5
6.3 Diagonal measuring system ... 5
Table 3 — Resolution of the measuring system ... 6
7 Test piece ... 6
7.1 Test surface ... 6
7.2 Preparation ... 6
7.3 Thickness ... 6
7.4 Tests on curved surfaces ... 6
7.5 Support of unstable test pieces ... 6
7.6 Metallic and other inorganic coatings ... 6
8 Procedure ... 7
8.1 Test temperature ... 7
8.2 Test force ... 7
Table 4 — Typical test forces ... 7
8.3 Periodic verification ... 7
8.4 Test piece support and orientation ... 7
8.5 Focus on test surface ... 8
8.6 Test force application ... 8
8.7 Prevention of the effect of shock or vibration ... 8
8.8 Minimum distance between adjacent indentations ... 8
Figure 2 — Minimum distance for Vickers indentations ... 9
8.9 Measurement of the diagonal length ... 9
8.10 Calculation of hardness value ... 10
9 Uncertainty of the results ... 10
10 Test report ... 10
Annex A (normative) Minimum thickness of the test piece in relation to the test force and hardness ... 12
Figure A.1 — Minimum thickness of the test piece in relation to the test force and hardness (HV 0,2 to HV 100) ... 13

iTeh Standards
(https://standards.iteh.ai)
Document Preview
ISO 6507-1
https://standards.iteh.ai/catalog/standards/sist/f8e3556f-0913-4987-b00c-a6a8adde5e1f/iso-6507-1

© ISO ~~2022~~2023 – All rights reserved
Edited DIS - MUST BE USED FOR FINAL DRAFT

Figure A.2 — Nomogram designed for the minimum thickness of the test piece (HV 0,01 to HV 100) 15
Annex B (normative) Tables of correction factors for use in tests made on curved surfaces 16
B.1 Spherical surfaces 16
Table B.1 — Convex spherical surfaces 16
Table B.2 — Concave spherical surfaces 17
B.2 Cylindrical surfaces 17
Table B.3 — Convex cylindrical surfaces — Diagonals at 45° to the axis 19
Table B.4 — Concave cylindrical surfaces — Diagonals at 45° to the axis 19
Table B.5 — Convex cylindrical surfaces — One diagonal parallel to the axis 19
Table B.6 — Concave cylindrical surfaces — One diagonal parallel to the axis 20
Annex C (normative) Procedure for periodic checking of the testing machine, diagonal measuring system and indenter by the user 21
C.1 Periodic verification 21
Table C.1 — Maximum permissible percent HV bias 21
C.2 Indenter inspection 22
Annex D (informative) Uncertainty of the measured hardness values 23
D.1 General requirements 23
D.2 General procedure 23
D.3 Procedures for calculating uncertainty: Hardness measurement values 24
D.3.1 Procedure with bias (method M1) 24
D.3.2 Procedure without bias (method M2) 25
D.4 Expression of the result of measurement 26
Table D.1 — Determination of the expanded uncertainly according to methods M1 and M2 28
Annex E (informative) Vickers hardness measurement traceability 31
E.1 Traceability definition 31
E.2 Chains of calibrations 31
Figure E.1 — Chains of calibrations 32
E.3 Vickers hardness reference 32
E.4 Practical issues 33
E.5 Vickers hardness measurement traceability 33
E.5.1 General 33
E.5.2 Calibration level traceability 33
E.5.3 User level traceability 34
Annex F (informative) CCM — Working group on hardness 35
Annex G (informative) Adjustment of Köhler illumination systems 36
G.1 General 36
G.2 Köhler illumination 36

iTeh Standards
(https://standards.iteh.ai)
Document Preview
ISO 6507-1
https://standards.iteh.ai/catalog/standards/sist/f8a3556f-0913-498f-b09c-a6a8adde5e1f/iso-6507-1

© ISO 2023 – All rights reserved

Formatted: English (United Kingdom)
Formatted: English (United Kingdom)
Formatted: English (United Kingdom)

Annex H (normative) Determining the Vickers hardness of metallic and other inorganic coatings 37
H.1 General 37
H.2 Test Piece 37
H.2.1 Surface roughness 37
H.2.2 Coating thickness measurement 37
H.2.3 Test piece for measurements on cross-sections 37
H.2.4 Test coupons 37
H.3 Procedure 38
H.3.1 Test temperature 38
H.3.2 Alignment of the test surface 38
H.3.3 Location of indentation 38
H.3.4 Indentation orientation and spacing when measuring a coating cross-section 38
H.3.5 Prevention of vibration 38
H.3.6 Selection of the test force 39
Figure H.1 — Relationship between minimum coating thickness, applied force and hardness when testing normal to the coating surface 41
H.3.7 Comparison measurements 41
H.3.8 Hardness calculation 41
H.3.9 Brittle layer materials 41
H.4 Test report 42
Bibliography 43

iTeh Standards
(https://standards.iteh.ai)
Document Preview
ISO 6507-1
https://standards.iteh.ai/catalog/standards/sist/f8e3556f-0913-498f-b00c-a6a8adde5e1f/iso-6507-1

© ISO ~~2022~~2023 – All rights reserved
Edited DIS - MUST BE USED FOR FINAL DRAFT

Foreword

ISO (the International Organization for Standardization) is a worldwide federation of national standards bodies (ISO member bodies). The work of preparing International Standards is normally carried out through ISO technical committees. Each member body interested in a subject for which a technical committee has been established has the right to be represented on that committee. International organizations, governmental and non-governmental, in liaison with ISO, also take part in the work. ISO collaborates closely with the International Electrotechnical Commission (IEC) on all matters of electrotechnical standardization.

The procedures used to develop this document and those intended for its further maintenance are described in the ISO/IEC Directives, Part 1. In particular, the different approval criteria needed for the different types of ISO ~~documents~~document should be noted. This document was drafted in accordance with the editorial rules of the ISO/IEC Directives, Part 2 (see ~~www.iso.org/directives~~www.iso.org/directives).

~~Attention is drawn~~ISO draws attention to the possibility that ~~some of~~ the ~~elements~~implementation of this document may ~~be~~involve the ~~subject~~use of (a) patent(s). ISO takes no position concerning the evidence, validity or applicability of any claimed patent rights~~.~~ in respect thereof. As of the date of publication of this document, ISO had not received notice of (a) patent(s) which may be required to implement this document. However, implementers are cautioned that this may not represent the latest information, which may be obtained from the patent database available at www.iso.org/patents. ISO shall not be held responsible for identifying any or all such patent rights. ~~Details of any patent rights identified during the development of the document will be in the Introduction and/or on the ISO list of patent declarations received (see www.iso.org/patents).~~

Any trade name used in this document is information given for the convenience of users and does not constitute an endorsement.

For an explanation ~~on~~of the voluntary nature of standards, the meaning of ISO specific terms and expressions related to conformity assessment, as well as information about ISO's adherence to the World Trade Organization (WTO) principles in the Technical Barriers to Trade (TBT) ~~see the following URL: www.iso.org/iso/foreword.html~~), see www.iso.org/iso/foreword.html.

This document was prepared by Technical Committee ISO/TC 164, *Mechanical testing of metals*, Subcommittee SC 3, *Hardness testing*, in collaboration with the European Committee for Standardization (CEN) Technical Committee CEN/TC 459, ECISS - European Committee for Iron and Steel Standardization, in accordance with the Agreement on technical cooperation between ISO and CEN (Vienna Agreement).

This fifth edition ~~cancels and replaces the fourth edition (~~of ISO 6507-1:~~2018) and~~, together with ISO 4545-1:2023, cancels and replaces ~~the second edition (~~ISO 4516:2002~~), which has been technically revised.~~, ISO 4545-1:2017 and ISO 6507-1.

The main changes are as follows:

— ~~scope~~Scope revised to include testing on metallic coatings and other inorganic coatings;

— added ~~subclause~~ 7.6 - Metallic and other inorganic coatings;

— requirements have been added to the test report for reporting the surface curvature, if the curvature correction is applicable;

© ISO 2023 – All rights reserved

Formatted: Adjust space between Latin and Asian text, Adjust space between Asian text and numbers
Formatted: English (United States)
Formatted: English (United Kingdom)
Formatted: Font: Not Italic, English (United Kingdom)
Formatted: English (United Kingdom)
Formatted: Pattern: Clear
Formatted: Pattern: Clear
Formatted: Pattern: Clear
Formatted: std_publisher
Formatted: std_docNumber
Formatted: std_docPartNumber
Formatted: std_publisher
Formatted: std_docNumber
Formatted: std_year
Formatted: Pattern: Clear

— added Annex H to cover coatings specific requirements;

— updated references.

A list of all parts in the ISO 6507 series can be found on the ISO website.

Any feedback or questions on this document should be directed to the user's national standards body. A complete listing of these bodies can be found at ~~www.iso.org/members.html~~www.iso.org/members.html.

iTeh Standards
(https://standards.iteh.ai)
Document Preview

ISO 6507-1
https://standards.iteh.ai/catalog/standards/sist/f8e3556f-0913-498f-b00c-a6a8adde5e1f/iso-6507-1

© ISO ~~2022~~2023 – All rights reserved
Edited DIS - MUST BE USED FOR FINAL DRAFT

Metallic materials — Vickers hardness test —Part 1: Test method

1 Scope

This document specifies the Vickers hardness test method for the three different ranges of test force for metallic materials, including hard metals and other cemented carbides (see Table 1), metallic coatings and other inorganic coatings.

Table 1 — Ranges of test force

Ranges of test force, F N	Hardness symbol	Designation
$F \geq 49{,}03$	≥HV 5	Vickers hardness test
$1{,}961 \leq F < 49{,}03$	HV 0,2 to <HV 5	Low-force Vickers hardness test
$0{,}009\ 807 \leq F < 1{,}961$	HV 0,001 to <HV 0,2	Vickers microhardness test

The Vickers hardness test is specified in this document for lengths of indentation diagonals between 0,020 mm and 1,400 mm. Using this method to determine Vickers hardness from smaller indentations is outside the scope of this document as results would suffer from large uncertainties due to the limitations of optical measurement and imperfections in tip geometry.

The Vickers hardness specified in this document is also applicable for metallic and other inorganic coatings including electrodeposited coatings, autocatalytic coatings, sprayed coatings and anodic coatings on aluminium.

This document is applicable to measurements normal to the coated surface and to measurements on cross-sections, provided that the characteristics of the coating (smoothness, thickness, etc.) permit accurate readings of the diagonal of the indentation.

This document is not applicable for coatings with thickness less than 0,030 mm when testing normal to the coating surface. This standard is not applicable for coatings with thickness less than 0,100 mm when testing a cross-section of the coating. ISO 14577-1 can be used for the determination of hardness from smaller indentations."

A periodic verification method is specified for routine checking of the testing machine in service by the user.

For specific materials and/or products, relevant International Standards exist.

2 Normative references

The following documents are referred to in the text in such a way that some or all of their content constitutes requirements of this document. For dated references, only the edition cited applies. For undated references, the latest edition of the referenced document (including any amendments) applies.

ISO 6507-2:2018, *Metallic materials — Vickers hardness test — Part 2: Verification and calibration of testing machines*

ISO 6507-3:2018, *Metallic materials — Vickers hardness test — Part 3: Calibration of reference blocks*

© ISO 20222023 – All rights reserved

iTeh Standards (https://standards.iteh.ai) Document Preview
ISO 6507-1
https://standards.iteh.ai/catalog/standards/sist/[illegible]-a6a8adde5e1f/iso-6507-1

Formatted: Pattern: Clear
Formatted: std_publisher
Formatted: std_docNumber
Formatted: std_docPartNumber
Formatted: Pattern: Clear
Formatted: Pattern: Clear
Formatted: Pattern: Clear
Formatted: Pattern: Clear
Formatted: Pattern: Clear
Formatted: Pattern: Clear
Formatted: Pattern: Clear
Formatted: Pattern: Clear
Formatted: Pattern: Clear

3 Terms and definitions

No terms and definitions are listed in this document.

ISO and IEC maintain terminology databases for use in standardization at the following addresses:

— ISO Online browsing platform: available at ~~https://www.iso.org/obp~~https://www.iso.org/obp

— IEC Electropedia: available at ~~https://www.electropedia.org/~~https://www.electropedia.org/

4 Symbols and designations

4.1 Symbols and designations used in this document

See Table 2 and Figure 1.

Formatted: Pattern: Clear

Formatted: Pattern: Clear

iTeh Standards
(https://standards.iteh.ai)
Document Preview

ISO 6507-1
https://standards.iteh.ai/catalog/standards/sist/f8e3556f-0913-498f-b00c-a6a8adde5e1f/iso-6507-1

Formatted: Font: 9 pt

Formatted: Normal

Formatted: Font: 9 pt

© ISO ~~2022~~2023 – All rights reserved

Edited DIS - MUST BE USED FOR FINAL DRAFT

Table 2 — Symbols and designations

Symbol	Designation
α	Mean angle between the opposite faces at the vertex of the pyramidal indenter (nominally 136°) (see Figure 1)
F	Test force, in newtons (N)
d	Arithmetic mean, in millimetres, of the two diagonal lengths d_1 and d_2 (see Figure 1)
HV	Vickers hardness $= \frac{\text{Test force (kgf)}}{\text{Surface area of indentation (mm}^2\text{)}} = \frac{\text{Test force (kgf)}}{\text{Surface area of indentation (mm}^2\text{)}}$ $= \frac{1}{g_n} \times \frac{\text{Test Force (N)}}{\text{Surface area of indentation (mm}^2\text{)}}$ $= \frac{1}{g_n} \times \frac{\text{Test Force (N)}}{\text{Surface area of indentation (mm}^2\text{)}}$ $= \frac{1}{g_n} \times \frac{F}{d^2 / \left(2\sin\frac{\alpha}{2}\right)} = \frac{1}{g_n} \times \frac{2F\sin\frac{\alpha}{2}}{d^2} = \frac{1}{g_n} \times \frac{F}{d^2 / \left(2\sin\frac{\alpha}{2}\right)} = \frac{1}{g_n} \times \frac{2F\sin\frac{\alpha}{2}}{d^2}$ For the nominal angle $\alpha = 136°$, Vickers hardness $\approx 0{,}189\ 1 \times \frac{F}{d^2} \approx 0{,}189\ 1 \times \frac{F}{d^2}$
To reduce uncertainty, the Vickers hardness may be calculated using the actual mean indenter angle, α. NOTE Standard acceleration due to gravity, g_n = 9,806 65 m/s² which is the conversion factor from kgf to N	

Formatted Table
Formatted: Pattern: Clear
Formatted: Pattern: Clear
Field Code Changed
Field Code Changed
Field Code Changed
Field Code Changed

iTeh Standards
(https://standards.iteh.ai)
Document Preview

4.2 Designation of hardness number

Vickers hardness, HV, is designated as shown in the following example.

ISO 6507-1
https://standards.iteh.ai/catalog/standards/sist/f8e3556f-0913-498f-b00c-a6a8adde5e1f/iso-6507-1

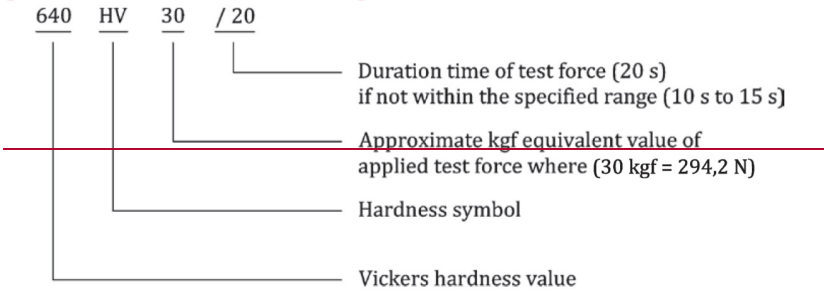

Edited DIS - MUST BE USED FOR FINAL DRAFT

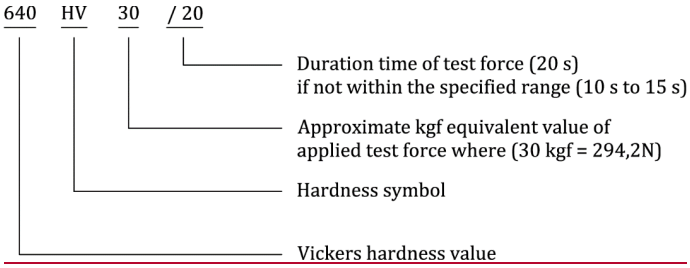

5 Principle

A diamond indenter, in the form of a right pyramid with a square base and with a specified angle between opposite faces at the vertex, is forced into the surface of a test piece followed by measurement of the diagonal length of the indentation left in the surface after removal of the test force, *F* (see Figure 1).

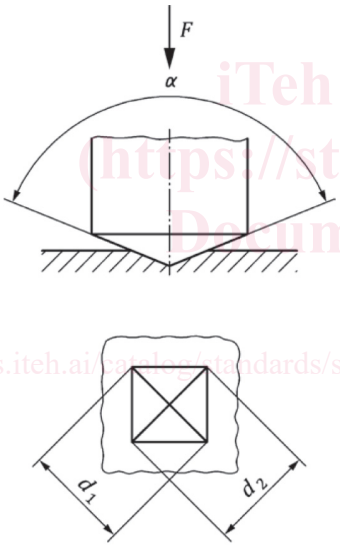

iTeh Standards
(https://standards.iteh.ai)
Document Preview
ISO 6507-1
https://standards.iteh.ai/catalog/standards/sist/f8e3556f-0913-498f-b00c-a6a8adde5e1f/iso-6507-1

© ISO ~~2022~~2023 – All rights reserved
Edited DIS - MUST BE USED FOR FINAL DRAFT

Formatted: Pattern: Clear
Formatted: Font: 9 pt
Formatted: Normal
Formatted: Font: 9 pt

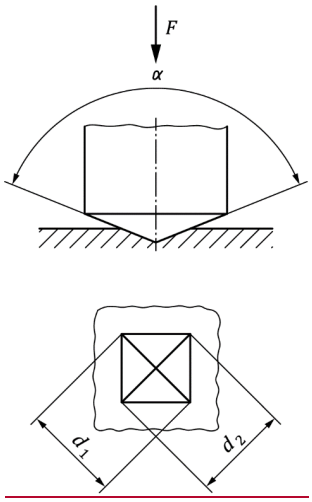

Figure 1 — Principle of the test, geometry of indenter and Vickers indentation

The Vickers hardness is proportional to the quotient obtained by dividing the test force by the area of the sloped surface of indentation, which is assumed to be a right pyramid with a square base and having at the vertex the same angle as the indenter.

NOTE 1 A right pyramid has its apex aligned with the centre of the base.

NOTE 2 As applicable, this document has adopted hardness test parameters as defined by the Working Group on Hardness (CCM-WGH) under the framework of the International Committee of Weights and Measures (CIPM) Consultative Committee for Mass and Related Quantities (CCM) (see Annex F).

iTeh Standards
(https://standards.iteh.ai)
Document Preview
ISO 6507-1
https://standards.iteh.ai/catalog/standards/sist/f8e3556f-0913-498f-b00c-a6a8adde5e1f/iso-6507-1

~~7~~6 Testing machine

~~7.1~~6.1 Testing machine

The testing machine shall be capable of applying a predetermined force or forces within the desired range of test forces, in accordance with ISO 6507-2.

~~7.2~~6.2 Indenter

The indenter shall be a diamond in the shape of a right pyramid with a square base, as specified in ISO 6507-2.

~~7.3~~6.3 Diagonal measuring system

The diagonal measuring system shall satisfy the requirements in ISO 6507-2.

Magnifications should be provided so that the diagonal can be enlarged to greater than 25 % but less than 75 % of the maximum possible optical field of view. Many objective lenses are nonlinear towards the edge of the field of view.

A diagonal measuring system using a camera for measurement can use 100 % of the camera's field of view provided it is designed to consider field of view limitations of the optical system.

Formatted: Pattern: Clear
Formatted: Pattern: Clear
Formatted: Pattern: Clear
Formatted: Pattern: Clear
Formatted: Pattern: Clear
Formatted: Pattern: Clear
Formatted: Pattern: Clear
Formatted: Pattern: Clear
Formatted: Pattern: Clear
Formatted: Pattern: Clear

© ISO ~~2022~~2023 – All rights reserved

Edited DIS - MUST BE USED FOR FINAL DRAFT

The resolution required of the diagonal measuring system depends on the size of the smallest indentation to be measured and shall be in accordance with Table 3. In determining the resolution of the measuring system, the resolution of the microscope optics, the digital resolution of the measuring scale and the step-size of any stage movement, where applicable, should be taken into account.

Table 3 — Resolution of the measuring system

Diagonal length, d mm	**Resolution of the measuring system**
$0{,}020 \leq d < 0{,}080$	0,000 4 mm
$0{,}080 \leq d \leq 1{,}400$	0,5 % of d

~~8~~7 Test piece

~~8.1~~7.1 Test surface

The test shall be carried out on a surface which is smooth and even, free from oxide scale, foreign matter and, in particular, completely free from lubricants, unless otherwise specified in product standards. The finish of the surface shall permit accurate determination of the diagonal length of the indentation.

For hard-metal samples, the thickness of the layer removed from the surface shall be not less than 0,2 mm.

~~8.2~~7.2 Preparation

Surface preparation shall be carried out in such a way as to prevent surface damage or alteration of the surface hardness due to excessive heating or cold-working.

Due to the small depth of Vickers microhardness indentations, it is essential that special precautions be taken during preparation. It is recommended to use a polishing/electropolishing process which is suitable for the material to be measured.

~~8.3~~7.3 Thickness

The thickness of the test piece or of the layer under test shall be at least 1,5 times the diagonal length of the indentation, as defined in Annex A. No deformation shall be visible at the back of the test piece after the test.

The thickness of a hard-metal test piece shall be at least 1 mm.

NOTE The depth of the indentation is approximately 1/7 of the diagonal length (0,143 d).

~~8.4~~7.4 Tests on curved surfaces

For tests on curved surfaces, the corrections given in Tables B.1 to B.6 shall be applied.

~~8.5~~7.5 Support of unstable test pieces

For a test piece of small cross-section or of irregular shape, either a dedicated support should be used or it should be mounted in a similar manner to a metallographic micro-section in appropriate material so that it is adequately supported and does not move during the force application.

~~8.6~~7.6 Metallic and other inorganic coatings

Annex H specifies additional procedures and requirements, which shall be applied when determining the Vickers hardness of metallic and other inorganic coatings.

iTeh Standards
(https://standards.iteh.ai)
Document Preview
ISO 6507-1
https://standards.iteh.ai/catalog/standards/sist/f8e3556f-0913-498f-b00c-a6a8adde5e1f/iso-6507-1

Formatted: Pattern: Clear
Formatted: Pattern: Clear
Formatted: Pattern: Clear
Formatted: Pattern: Clear
Formatted: Pattern: Clear
Formatted: Font: 9 pt
Formatted: Normal
Formatted: Font: 9 pt

© ISO ~~2022~~2023 – All rights reserved
Edited DIS - MUST BE USED FOR FINAL DRAFT