FINAL
DRAFT

INTERNATIONAL
STANDARD

**ISO/IEC
FDIS
23008-9**

ISO/IEC JTC **1**/SC **29**

Secretariat: **JISC**

Voting begins on:
2023-02-02

Voting terminates on:
2023-03-30

Information technology — High efficiency coding and media delivery in heterogeneous environments —

Part 9:
3D Audio conformance testing

Technologies de l'information — Codage à haut rendement et fourniture de supports dans les environnements hétérogènes —

Partie 9: Essais de conformité 3D Audio

iTeh STANDARD PREVIEW
(standards.iteh.ai)
ISO/IEC FDIS 23008-9
https://standards.iteh.ai/catalog/standards/sist/1f144e02-b60d-490e-b2cc-6a6f828190e1/iso-iec-fdis-23008-9

RECIPIENTS OF THIS DRAFT ARE INVITED TO SUBMIT, WITH THEIR COMMENTS, NOTIFICATION OF ANY RELEVANT PATENT RIGHTS OF WHICH THEY ARE AWARE AND TO PROVIDE SUPPORTING DOCUMENTATION.

IN ADDITION TO THEIR EVALUATION AS BEING ACCEPTABLE FOR INDUSTRIAL, TECHNOLOGICAL, COMMERCIAL AND USER PURPOSES, DRAFT INTERNATIONAL STANDARDS MAY ON OCCASION HAVE TO BE CONSIDERED IN THE LIGHT OF THEIR POTENTIAL TO BECOME STANDARDS TO WHICH REFERENCE MAY BE MADE IN NATIONAL REGULATIONS.

Reference number
ISO/IEC FDIS 23008-9:2023(E)

© ISO/IEC 2023

iTeh STANDARD PREVIEW
(standards.iteh.ai)
ISO/IEC FDIS 23008-9
https://standards.iteh.ai/catalog/standards/sist/1f144e02-b60d-490e-b2cc-6a6f828190e1/iso-iec-fdis-23008-9

COPYRIGHT PROTECTED DOCUMENT

© ISO/IEC 2023

All rights reserved. Unless otherwise specified, or required in the context of its implementation, no part of this publication may be reproduced or utilized otherwise in any form or by any means, electronic or mechanical, including photocopying, or posting on the internet or an intranet, without prior written permission. Permission can be requested from either ISO at the address below or ISO's member body in the country of the requester.

ISO copyright office
CP 401 • Ch. de Blandonnet 8
CH-1214 Vernier, Geneva
Phone: +41 22 749 01 11
Email: copyright@iso.org
Website: www.iso.org

Published in Switzerland

© ISO/IEC 2023 – All rights reserved

Contents

Page

Foreword ... **vii**
Introduction ... **viii**
1 Scope ... **1**
2 Normative references ... **1**
3 Terms, definitions and abbreviated terms ... **1**
3.1 Terms and definitions ... 1
3.2 Abbreviated terms ... 2
4 MPEG-H 3D audio conformance testing ... **3**
4.1 General ... 3
4.2 Profiles ... 3
4.3 Test procedure ... 3
4.3.1 General ... 3
4.3.2 Naming convention ... 4
4.3.3 Conformance test tools ... 6
5 MPEG-H 3D audio bitstreams ... **7**
5.1 Characteristics, test procedure ... 7
5.2 MPEG-H 3D audio general configuration ... 7
5.2.1 mpegh3daConfig() ... 7
5.2.2 FrameworkConfig3d() ... 7
5.2.3 Signals3d() ... 7
5.2.4 SpeakerConfig3d() ... 8
5.2.5 mpegh3daFlexibleSpeakerConfig() ... 8
5.2.6 mpegh3daSpeakerDescription() ... 8
5.3 MPEG-H 3D core audio configuration ... 8
5.3.1 mpegh3daDecoderConfig() ... 8
5.3.2 mpegh3daSingleChannelElementConfig() ... 8
5.3.3 mpegh3daChannelPairElementConfig() ... 9
5.3.4 mpegh3daCoreConfig() ... 9
5.3.5 mpegh3daLfeElementConfig() ... 9
5.3.6 mpegh3daExtElementConfig() ... 9
5.3.7 mpegh3daConfigExtension() ... 10
5.3.8 SbrConfig() ... 10
5.3.9 Mps212Config() ... 10
5.4 MPEG-H 3D core audio frame ... 11
5.4.1 mpegh3daFrame() ... 11
5.4.2 mpegh3daSingleChannelElement() ... 11
5.4.3 mpegh3daChannelPairElement() ... 11
5.4.4 mpegh3daLfeElement() ... 11
5.4.5 mpegh3daExtElement() ... 11
5.4.6 ics_info() ... 12
5.4.7 mpegh3daCoreCoderData() ... 12
5.4.8 StereoCoreToolInfo() ... 12
5.4.9 fd_channel_stream() ... 13
5.4.10 lpd_channel_stream() ... 13
5.4.11 acelp_coding() ... 14
5.4.12 tcx_coding () ... 14
5.4.13 lpd_stereo_stream() ... 15
5.4.14 igf_stereo_pred_data() ... 15
5.4.15 igf_data() ... 15
5.4.16 tbe_data() ... 15
5.4.17 tw_data() ... 16
5.4.18 scale_factor_data() ... 16

iTeh STANDARD PREVIEW
(standards.iteh.ai)
ISO/IEC FDIS 23008-9
https://standards.iteh.ai/catalog/standards/sist/1...4e02-b601-400e-b2cc-6a6f828190e1/iso-iec-

© ISO/IEC 2023 – All rights reserved

5.4.19 tns_data() 16
5.4.20 ac_spectral_data() 16
5.4.21 arith_data() 16
5.4.22 fac_data() 16
5.4.23 code_book_indices() 16
5.4.24 UsacSbrData() 16
5.4.25 Mps212Data() 16
5.5 Fill element 17
5.6 MPEG surround configuration, SpatialSpecificConfig() 17
5.7 MPEG surround frame, SpatialFrame() 17
5.8 SAOC configuration, SAOCSpecificConfig() 17
5.9 SAOC frame, SAOCFrame() 17
5.10 AudioPreRoll 17
5.10.1 Recursive presence of AudioPreRoll extension payload 17
5.10.2 AudioPreRoll() 17
5.11 Dynamic range control configuration 17
5.11.1 mpegh3daUniDrcConfig() 17
5.11.2 mpegh3daUniDrcChannelLayout() 18
5.11.3 drcCoefficientsUniDrc() 18
5.11.4 drcInstructionsUniDrc() 18
5.11.5 uniDrcConfigExtension() 18
5.12 Dynamic range control frame, uniDrcGain() 18
5.13 Object metadata configuration, ObjectMetadataConfig() 18
5.14 Object metadata frame 18
5.14.1 object_metadata_efficient() 18
5.14.2 object_metadata() 18
5.14.3 object_metadata_efficient() 19
5.14.4 intracoded_object_metadata_efficient() 19
5.14.5 differential_object_metadata() 20
5.14.6 offset_data() 21
5.14.7 object_metadata_low_delay() 21
5.14.8 intracoded_object_metadata_low_delay() 21
5.14.9 dynamic_object_metadata() 22
5.14.10 single_dynamic_object_metadata() 22
5.15 EnhancedObjectMetadataConfig() 23
5.16 EnhancedObjectMetadataFrame() 24
5.17 SAOC 3D Config 24
5.17.1 SAOC3DSpecificConfig() 24
5.17.2 SAOC3DgetNumChannels() 25
5.17.3 SAOC3DExtensionConfig() 25
5.17.4 SAOC3DExtensionConfigData() 25
5.17.5 SAOCExtensionConfig() 25
5.18 SAOC 3D frame 25
5.18.1 Saoc3DFrame() 25
5.18.2 SAOC3DFramingInfo() 26
5.18.3 EcDataSaoc() 26
5.18.4 ByteAlign() 26
5.18.5 SAOC3DExtensionFrame() 26
5.18.6 SAOC3DExtensionFrameData() 26
5.18.7 SAOCExtensionFrame() 26
5.18.8 HOAConfig() 26
5.18.9 HOADecoderConfig() 26
5.18.10 HOAEnhConfig() 27
5.18.11 HOADecoderEnhConfig () 27
5.18.12 getSubbandWidths () 27
5.19 HOA frame 28
5.19.1 HOAFrame() 28
5.19.2 HOAEnhFrame () 28

iTeh STANDARD PREVIEW
(standards.iteh.ai)
ISO/IEC FDIS 23008-9

© ISO/IEC 2023 – All rights reserved

5.19.3 ChannelSideInfoData() 28
5.19.4 AddAmbHoaInfoChannel() 28
5.19.5 HOAGainCorrectionData() 28
5.19.6 VVectorData() 29
5.19.7 HOAPredictionInfo() 29
5.19.8 HOADirectionalPredictionInfo() 29
5.19.9 readDirPredDiffValues() 30
5.19.10 HOAParInfo () 30
5.19.11 readParDiffValues () 30
5.20 FMT converter frame, FormatConverterFrame() 30
5.21 Multi-channel coding tool config, MCTConfig () 30
5.22 Multi-channel coding tool frame 30
5.22.1 MultichannelCodingBoxRotation () 30
5.22.2 MultichannelCodingBoxPrediction () 31
5.22.3 MultichannelCodingFrame() 31
5.23 Tonal component coding configuration, TccConfig () 32
5.24 Tonal component coding frame 32
5.24.1 General 32
5.24.2 TccGroupOfSegments() 32
5.25 HREP config, HREPConfig() 32
5.26 HREP frame, HREPFrame() 33
5.27 ICG config, ICGConfig () 33
5.28 SignalGroupInformation Config, SignalGroupInformation () 33
5.29 DownmixMatrix 33
5.29.1 downmixConfig() 33
5.29.2 DownmixMatrixSet() 33
5.29.3 DownmixMatrix() 34
5.29.4 DecoderGainValue() 34
5.29.5 ReadRange() 35
5.29.6 EqualizerConfig() 35
5.30 Loudness info 35
5.30.1 mpegh3daLoudnessInfoSet() 35
5.30.2 loudnessInfo() 35
5.30.3 loudnessInfoSetExtension() 35
5.31 Audioscene info 36
5.31.1 mae_AudioSceneInfo 36
5.31.2 mae_Data() 36
5.31.3 mae_GroupDefinition() 36
5.31.4 mae_SwitchGroupDefinition() 37
5.31.5 mae_Description() 37
5.31.6 mae_ContentData() 37
5.31.7 mae_CompositePair() 38
5.31.8 mae_GroupPresetDefinition() 38
5.31.9 mae_ProductionScreenSizeData() 39
5.31.10 mae_LoudnessCompensationData () 39
5.31.11 mae_ProductionScreenSizeDataExtension() 39
5.31.12 mae_GroupPresetDefinitionExtension() 40
5.31.13 mae_DrcUserInterfaceInfo() 40
5.32 HOA matrix 41
5.32.1 HoaRenderingMatrixSet() 41
5.32.2 HoaRenderingMatrix() 41
5.32.3 DecoderHoaMatrixData() 42
5.32.4 DecoderHoaGainValue() 42
5.33 CompatibleProfileLevelSet() 42
5.34 Restrictions depending on profiles and levels 42
5.34.1 General 42
5.34.2 Low complexity profile 42
6 MPEG-H 3D audio interfaces to the MPEG-H 3D audio decoder 46

iTeh STANDARD PREVIEW
(standards.iteh.ai)
ISO/IEC FDIS 23008-9
https://standards.iteh.ai/catalog/standards/sist/...-iso-iec-fdis-23008-9

6.1 Characteristics and test procedure 46
6.2 Interface for local setup information 46
6.2.1 mpegh3daLocalSetupInformation() 46
6.2.2 LoudspeakerRendering() 46
6.2.3 BinauralRendering() 47
6.2.4 LocalScreenSizeInformation() 47
6.3 Interface for user interaction 47
6.3.1 mpegh3daElementInteraction() 47
6.3.2 ElementInteractionData () 47
6.3.3 ei_GroupInteractivityStatus () 48
6.3.4 LocalZoomAreaSize() 48
6.4 Interface for loudness normalization and dynamic range control 48
6.5 Interface for scene displacement data, mpegh3daSceneDisplacementData() 48
6.6 Interface for positional scene displacement data, mpegh3daPositionalSceneDisplacementData() 48

7 MPEG-H 3D audio decoders 49
7.1 General 49
7.2 Basic conformance test conditions 49
7.2.1 Element configuration test condition 49
7.2.2 Sampling rate 51
7.2.3 Core mode tests [Fd|Lpd|Cct] 52
7.3 Additional test conditions 52
7.3.1 3D audio core (FD) 52
7.3.2 3D audio core (LPD) 60
7.3.3 3D audio core (FD and LPD) 64
7.3.4 Object rendering 71
7.3.5 Higher order ambisonics (HOA) 74
7.3.6 Signalling of HOA rendering matrix [Hmx] 78
7.3.7 Downmix matrix test condition (dwx) 78
7.3.8 Dynamic range and loudness control 80
7.3.9 AudioPreRoll() condition, immediate playout frame (IPF) 84
7.4 Decoder settings 85
7.4.1 Target layout (Lay-<x>) 85
7.4.2 Target loudness (Lou-<x>) 86
7.4.3 DRC effect type request (Eff-<x>) 87
7.4.4 Group preset request (Pr-<x>) 87
7.4.5 Conformance point (Cpo-<x>) 88

Bibliography 89

iTeh STANDARD PREVIEW
(standards.iteh.ai)
ISO/IEC FDIS 23008-9
https://standards.iteh.ai/catalog/standards/sist/1f81de01-b60d-490e-a6ef-6a6f828190e1/iso-iec-fdis-23008-9

© ISO/IEC 2023 – All rights reserved

Foreword

ISO (the International Organization for Standardization) and IEC (the International Electrotechnical Commission) form the specialized system for worldwide standardization. National bodies that are members of ISO or IEC participate in the development of International Standards through technical committees established by the respective organization to deal with particular fields of technical activity. ISO and IEC technical committees collaborate in fields of mutual interest. Other international organizations, governmental and non-governmental, in liaison with ISO and IEC, also take part in the work.

The procedures used to develop this document and those intended for its further maintenance are described in the ISO/IEC Directives, Part 1. In particular, the different approval criteria needed for the different types of document should be noted. This document was drafted in accordance with the editorial rules of the ISO/IEC Directives, Part 2 (see www.iso.org/directives or www.iec.ch/members_experts/refdocs).

Attention is drawn to the possibility that some of the elements of this document may be the subject of patent rights. ISO and IEC shall not be held responsible for identifying any or all such patent rights. Details of any patent rights identified during the development of the document will be in the Introduction and/or on the ISO list of patent declarations received (see www.iso.org/patents) or the IEC list of patent declarations received (see https://patents.iec.ch).

Any trade name used in this document is information given for the convenience of users and does not constitute an endorsement.

iTeh STANDARD PREVIEW
(standards.iteh.ai)

For an explanation of the voluntary nature of standards, the meaning of ISO specific terms and expressions related to conformity assessment, as well as information about ISO's adherence to the World Trade Organization (WTO) principles in the Technical Barriers to Trade (TBT) see www.iso.org/iso/foreword.html. In the IEC, see www.iec.ch/understanding-standards.

ISO/IEC FDIS 23008-9
https://standards.iteh.ai/catalog/standards/sist/1b40e02a-260d-490a-a2ea-baedb28c90e1/iso-iec-fdis-23008-9

This document was prepared by Joint Technical Committee ISO/IEC JTC 1, *Information technology*, Subcommittee SC 29, *Coding of audio, picture, multimedia and hypermedia information*.

This third edition cancels and replaces the second edition (ISO/IEC 23008-9:2022) which has been technically revised.

The main changes are as follows:

— Sample rate conversion.

A list of all parts in the ISO 23008 series can be found on the ISO and IEC websites.

Any feedback or questions on this document should be directed to the user's national standards body. A complete listing of these bodies can be found at www.iso.org/members.html and www.iec.ch/national-committees.

© ISO/IEC 2023 – All rights reserved

Introduction

This document specifies how tests can be designed to verify whether bitstreams and decoders meet the requirements as specified in ISO/IEC 23008-3 and allow interoperability with remote terminals in interactive, broadcast, streaming and local (with stored contents) sessions. These tests can be used for various purposes, such as:

— manufacturers of encoders, and their customers, can use the tests to verify whether the encoder produces bitstreams compliant with ISO/IEC 23008-3,

— manufacturers of decoders and their customers can use the tests to verify whether the decoder meets the requirements specified in ISO/IEC 23008-3 for the claimed decoder capabilities,

— manufacturers and customers of terminals supporting interactive, broadcast, streaming, and local sessions over a multitude of transport protocols and networks, can use the tests to verify whether the claimed functionalities are compliant with ISO/IEC 23008-3,

— manufacturers of test equipment, and their customers can use the tests to verify compliance with ISO/IEC 23008-3.

iTeh STANDARD PREVIEW
(standards.iteh.ai)
ISO/IEC FDIS 23008-9
https://standards.iteh.ai/catalog/standards/sist/1f144e02-b60d-490e-b2cc-6a6f828190e1/iso-iec-fdis-23008-9

© ISO/IEC 2023 – All rights reserved

Information technology — High efficiency coding and media delivery in heterogeneous environments —

Part 9:
3D Audio conformance testing

1 Scope

This document specifies conformance criteria for both bitstreams and decoders compliant with the MPEG-H 3D audio standard as defined in ISO/IEC 23008-3. This is done to assist implementers and to ensure interoperability.

2 Normative references

The following documents are referred to in the text in such a way that some or all of their content constitutes requirements of this document. For dated references, only the edition cited applies. For undated references, the latest edition of the referenced document (including any amendments) applies.

iTeh STANDARD PREVIEW
(standards.iteh.ai)

ISO/IEC 23003-1, *Information technology — MPEG audio technologies — Part 1: MPEG Surround/ — Amendment 1: Conformance testing*

ISO/IEC 23003-2, *Information technology — MPEG audio technologies — Part 2: Spatial Audio Object Coding (SAOC) — Amendment 4: SAOC Conformance*

ISO/IEC FDIS 23008-9
https://standards.iteh.ai/catalog/standards/sist/1f144e02-b60d-490e-b2ce-6a6f828190e1/iso-iec-fdis-23008-9

ISO/IEC 23003-3:2020, *Information technology — MPEG audio technologies — Part 3: Unified speech and audio coding*

ISO/IEC 23003-4:2020, *Information technology — MPEG audio technologies — Part 4: Dynamic range control*

ISO/IEC 23008-3:2022, *Information technology — High efficiency coding and media delivery in heterogeneous environments — Part 3: 3D audio*

ISO/IEC 23091-3, *Information technology — Coding-independent code points — Part 3: Audio*

3 Terms, definitions and abbreviated terms

3.1 Terms and definitions

For the purposes of this document, the following terms and definitions apply.

ISO and IEC maintain terminology databases for use in standardization at the following addresses:

— ISO Online browsing platform: available at https://www.iso.org/obp

— IEC Electropedia: available at https://www.electropedia.org/

3.1.1
bitstream
encoded audio data

© ISO/IEC 2023 – All rights reserved

3.1.2
conformance test bitstream
MPEG-H 3DA encoded bitstream used for testing the conformance of a MPEG-H 3DA decoder

3.1.3
conformance test case
combination of one or more conformance test conditions for which one conformance test bitstream is provided

3.1.4
conformance test condition
condition which applies to properties of a conformance test bitstream in order to test a certain functionality of the MPEG-H 3DA decoder

3.1.5
conformance test criteria
one or more conformance test tools with requirements that define whether a given output from a decoder under test fulfils the conformance

3.1.6
conformance test data
conformance test sequences and conformance criteria

3.1.7
conformance test sequences
generic term for conformance test bitstream and decoder settings with a corresponding reference

iTeh STANDARD PREVIEW
(standards.iteh.ai)

3.1.8
conformance test tool
tool to compare the reference waveform with the output from a decoder under test

ISO/IEC FDIS 23008-9
https://standards.iteh.ai/catalog/standards/sist/1f144e02-b60d-490e-b2cc-6a6f828190e1/iso-iec-fdis-23008-9

3.1.9
decoder setting case
combination of one or more decoder setting conditions to trigger specific settings of the decoder

3.1.10
decoder setting condition
condition applied to the decoder behaviour in order to test functionality of the MPEG-H 3DA decoder

3.1.11
reference waveform
decoded counterpart of a conformance test bitstream with specific decoder settings

3.2 Abbreviated terms

3DA	3D audio
MPEG-H 3DA bitstream	data encoded according to ISO/IEC 23008-3
MPEG-H 3DA CPE	mpegh3daChannelPairElement
MPEG-H 3DA EXT	mpegh3daExtElement
MPEG-H 3DA LFE	mpegh3daLfeElement
MPEG-H 3DA SCE	mpegh3daSingleChannelElement

© ISO/IEC 2023 – All rights reserved

4 MPEG-H 3D audio conformance testing

4.1 General

This clause specifies conformance criteria for both bitstreams and decoders compliant with ISO/IEC 23008-3 as defined in this document. This is done to assist implementers and to ensure interoperability.

4.2 Profiles

Profiles are defined in ISO/IEC 23008-3:2022, 4.8. Some conformance criteria apply to MPEG-H 3D audio in general, while others are specific to certain profiles and their respective levels. Conformance shall be tested for the level of the profile with which a given bitstream or decoder claims to comply.

In addition to the conformance requirements described in this clause, a decoder which claims to comply with the MPEG-H 3D audio shall fulfil conformance defined in ISO/IEC 23003-4:2020, Clause 9.

4.3 Test procedure

4.3.1 General

To test a decoder for compliance to MPEG-H 3D audio decoding, conformance test data is provided. The package of the conformance test data is described in Figure 1. It is accessible at https://standards.iso.org/iso-iec/23008/-9/ed-3/en and contains all conformance test tools, conformance bitstreams, reference waveforms, and conformance tables in a spreadsheet. The latter defines all the conformance test sequences. To fulfil a conformance test sequence, the decoder under test shall decode the corresponding conformance test bitstream with the given decoder setting case. The output of the decoder under test shall meet the conformance test criteria in comparison with the respective reference waveform. Some conformance test sequences test only the stability of the decoder under test. Such conformance test sequences consist only of the conformance test case with the corresponding conformance test bitstream. The decoder under test shall pass all conformance test sequences.

iTeh STANDARD PREVIEW
(standards.iteh.ai)
ISO/IEC FDIS 23008-9
https://standards.iteh.ai/catalog/standards/sist/11144eb2-b80d-49f5-b2ec-6a6f828190a1/iso-iec-fdis-23008-9

© ISO/IEC 2023 – All rights reserved

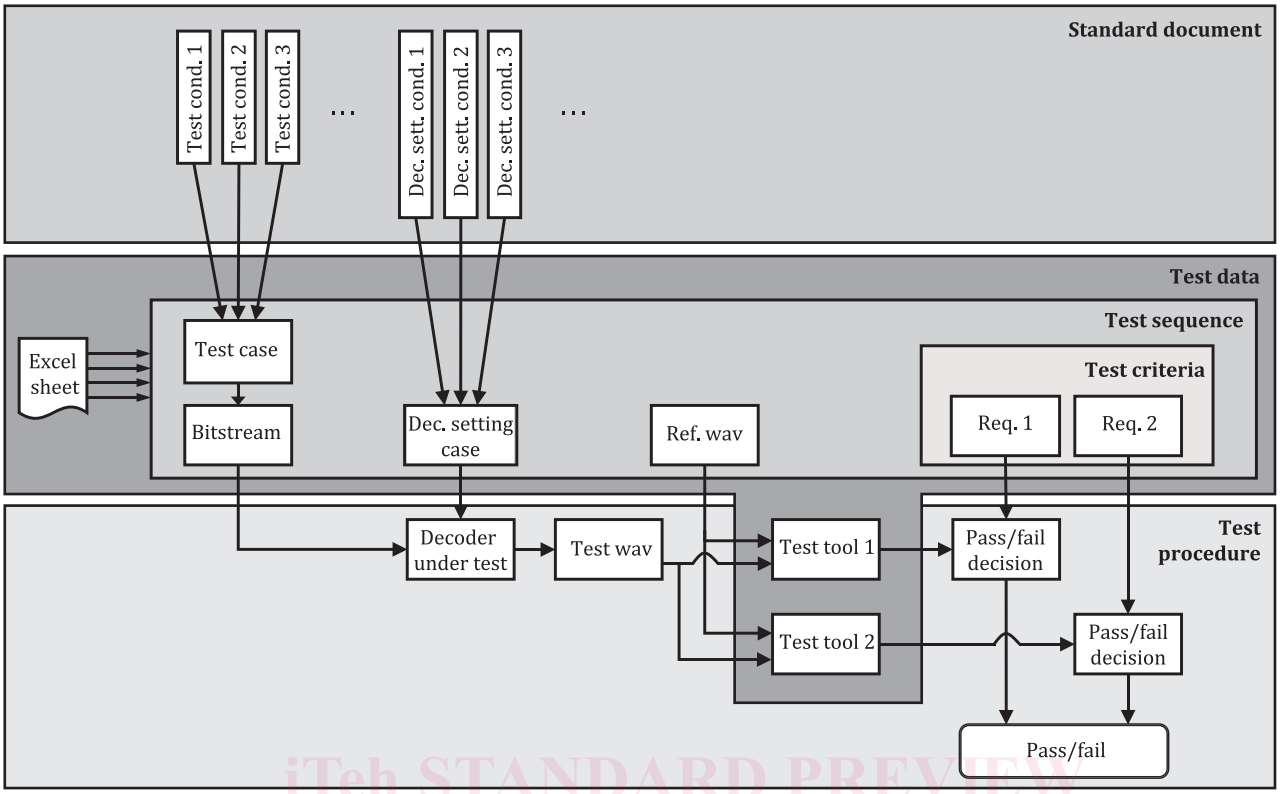

Figure 1 — Conformance testing components

In case where the decoder under test is followed by additional operations (e.g. quantizing a signal to a 16 bit output signal) the conformance point is prior to such additional operations, i.e. it is permitted to use the actual decoder output (e.g. with more than 16 bit) for conformance testing. Measurements are carried out relative to full scale where the output signals of the decoders are normalized to be in the range between -1.0 and +1.0. The decoded reference waveforms are supplied as ".wav" files. These are always supplied as 24 bit resolution (RIFF (little-endian) data, WAVE audio, pulse code modulation (PCM), 24 bit).

The conformance test criteria define what conformance test tools and parameter are used to compare the reference waveforms with the output waveforms from the decoder under test. The conformance test tools are defined in 4.3.3.

The characteristics of the conformance test bitstream are defined by the corresponding conformance test case. A conformance test case is a combination of all basic conformance test conditions, specified in 7.2, and possibly one or several additional conformance test conditions, specified in 7.3. Note that the same conformance test bitstream may be a part of several conformance test sequences.

The decoder setting case is a combination of the decoder setting conditions. The decoder setting conditions are defined in 7.3.9. If no specific decoder setting case is applicable, then all the decoder settings for the decoder default behaviour shall be used.

4.3.2 Naming convention

The name of the conformance test case is composed of several parts. The first part conveys the information of all basic conformance test conditions. These abbreviations are appended in the order as defined in 7.2. The second part of the name conveys the information of all additional test conditions. The abbreviations of the additional test conditions are defined in Table 1. The abbreviations of the conformance test conditions are in an alphabetical order. All conformance test conditions are connected by an underscore.

The name of the conformance test case is illustrated as follows:

© ISO/IEC 2023 – All rights reserved

[3daC_ElemConfIdx]_[3daC_SampFreqIdx]_[FD|LPD|Cct]_<testCase1>_<testCase2>

The name for the corresponding conformance test bitstream is the same appended with the transport format extension.

The name of the decoder setting case is composed of several decoder setting conditions. The abbreviations of the decoder setting conditions are defined in Table 2. The abbreviations of the decoder setting conditions are in the order as defined in 7.3.9.

The name of the conformance test sequence is composed of the name of the conformance test case and the name of the decoder setting case connected by two underscores.

The name of the conformance test sequence is illustrated as follows:

[3daC_ElemConfIdx]_[3daC_SampFreqIdx]_[FD|LPD|Cct]_<testCase1>_<testCase2>__<decoderSettingCase1>_<decoderSettingCase2>

The name of the corresponding reference waveform is the same as the name of the conformance test sequence appended with the audio file extension.

Table 1 — Conformance test abbreviations for additional test conditions

Test condition	Abbreviation
Basic FD window	Win
Non-meaningful FD window switching	Nmf
Aliasing symmetries	Asy
Noise filling	Nf
Varying max_sfb	Sfb
TNS test condition	Tns
M/S stereo	Ms
Complex prediction stereo	Cp
LPC coding	Lpc
ACELP core mode	Ace
TCX and noise filling	Tcx
fullband LPD	fbL-<x1>-<x2>...
LPD mode coverage and FAC	Lpd
AVQ test condition	avq
stereo LPD	sLP-<x1>-<x2>...
Time domain bandwidth extension	Tbe
Frequency domain prediction	Fdp
Long-term postfilter	Lpf
Bass-post filter	Bpf
Channel pair element configuration	cpc-<x1>-<x2>-...
IGF range signalling	E-ran-<x>-<y>
IGF tiling	E-Cti
IGF whitening	E-Wht
IGF envelope noise flattening	E-Enf
IGF after TNS synth	E-Ats
IGF no high resolution	E-Nhr
IGF no independent tiling	E-Nit
Stereo filling	E-SFi
MCT channel signalling	M-chM-<x>

iTeh STANDARD PREVIEW
(standards.iteh.ai)
ISO/IEC FDIS 23008-9
https://standards.iteh.ai/catalog/standards/sist/111e4e02-b60d-490e-52ee-6a6f828190e1/iso-iec-fdis-23008-9

© ISO/IEC 2023 – All rights reserved

Table 1 *(continued)*

Test condition	Abbreviation
MCT signalling type	M-Typ-<x>
mct stereo filling	M-SFi-<x>
MCT mechanics	M-Mec
MCT rotation content	M-Rot
MCT prediction content	M-Pre
OAM position and gain	O-Pos
OAM transmission rate	O-rat-<x>
OAM spread modes	O-spr-<x>
Loudness normalization	D-Ln-Lay-<x0-x1-...>-Gr-<y0-y1-...>-Pr-<z0-z1-...>
Dynamic range control	D-Drc-<w0-w1-...>-Lay-<x0-x1-...>-Gr-<y0-y1-...>-Pr-<z0-z1-...>
Ducking	D-Duck-Gr-<x0-x1-...>-Pr-<y0-y1-...>
AudioPreRoll, IPF freq. of occurrence	I-foo-<x>

Table 2 — Conformance test abbreviations for decoder setting condition

Test condition	Abbreviation
Target layout	Lay-<x>
Target loudness	Lou-<x>
DRC effect type request	Eff-<x>
Group preset selection	Pr-<x>
Conformance point	Cpo-<x>

iTeh STANDARD PREVIEW
(standards.iteh.ai)
ISO/IEC FDIS 23008-9
https://standards.iteh.ai/catalog/standards/sist/1f144e02-b60d-490e-b2cc-6a6f828190e1/iso-iec-fdis-23008-9

4.3.3 Conformance test tools

4.3.3.1 RMS/LSB measurement

The RMS/LSB measurement is defined in ISO/IEC 14496-26:2010, 7.1.2.2.1.

4.3.3.2 Segmental SNR

The Segmental SNR is defined in ISO/IEC 14496-26:2010, 7.1.2.2.2.

4.3.3.3 File length after resampling (FLAR)

This criterion is designed to verify the sampling rate conversion of an MPEG-H 3D Audio decoder.

The conformance criterion is defined as the file length of the decoded PCM signal in samples (conformance file length n_{conf}). Due to potentially differing resampler implementations, the resulting file length after resampling n_{FLAR} may vary between decoders. The decoded file length after resampling n_{FLAR} shall not exceed the indicated length $n_{conf,}$ and it shall not be more than 2 PCM samples shorter:

$$n_{conf} - 2 \leq n_{FLAR} \leq n_{conf}$$

where

n_{conf} is the conformance file length in samples;

n_{FLAR} is the number of decoded PCM samples after sampling rate conversion.

© ISO/IEC 2023 – All rights reserved

5 MPEG-H 3D audio bitstreams

5.1 Characteristics, test procedure

Characteristics of bitstreams specify the constraints that are applied by the encoder in generating the bitstream. These syntactic and semantic constraints may, for example, restrict the range or the values of parameters that are encoded directly or indirectly in the bitstreams.

Each MPEG-H 3DA bitstream shall meet the syntactic and semantic requirements specified in this document. The present clause defines the conformance criteria that shall be fulfilled by a compliant bitstream. These criteria are specified for the syntactic elements of the bitstream and for some parameters decoded from the MPEG-H 3DA bitstream payload.

For each tool a set of semantic tests to be performed on the bitstreams is described. To verify whether the syntax is correct is straightforward and therefore not defined herein after. In the description of the semantic tests it is assumed that the tested bitstreams contain no errors due to transmission or other causes. For each test the condition or conditions that shall be satisfied are given, as well as the prerequisites or conditions in which the test can be applied.

5.2 MPEG-H 3D audio general configuration

5.2.1 mpegh3daConfig()

mpegh3daProfileLevelIndication shall be one of the non-reserved values as defined in ISO/IEC 23008-3:2022, Table 67

usacSamplingFrequencyIndex shall be one of the non-reserved values as defined in ISO/IEC 23003-3:2020, Table 67

usacSamplingFrequency no restrictions apply

coreSbrFrameLengthIndex shall be one of the non-reserved values as defined in ISO/IEC 23003-3:2020, Table 70

reserved shall be 0

receiverDelayCompensation no restrictions apply

usacConfigExtensionPresent no restrictions apply

5.2.2 FrameworkConfig3d()

No restrictions are applicable to this bitstream element.

5.2.3 Signals3d()

bsNumSignalGroups shall be 0 if speakerLayoutType of the reference-Layout is 3

signalGroupType shall be 0 if speakerLayoutType of the reference-Layout is 3

differsFromReferenceLayout shall be 0 if speakerLayoutType of the reference-Layout is 3

saocDmxLayoutPresent no restrictions apply

iTeh STANDARD PREVIEW
(standards.iteh.ai)
ISO/IEC FDIS 23008-9
https://standards.iteh.ai/catalog/standards/sist/1f144e02-b60d-490e-b2cc-6a6f828190e1/iso-iec-fdis-23008-9

© ISO/IEC 2023 – All rights reserved