INTERNATIONAL STANDARD

ISO 3410

Second edition
1989-08-01

Agricultural machinery — Endless variable-speed V-belts and groove sections of corresponding pulleys

iTeh STANDARD PREVIEW
(standards.iteh.ai)

Machines agricoles — Courroies trapézoïdales sans fin pour variateurs de vitesse et profils de gorge des poulies correspondantes

ISO 3410:1989
https://standards.iteh.ai/catalog/standards/sist/848be405-e621-4a52-a670-17e66e8dcc1f/iso-3410-1989

INTERNATIONAL ISO

Reference number
ISO 3410 : 1989 (E)

Foreword

ISO (the International Organization for Standardization) is a worldwide federation of national standards bodies (ISO member bodies). The work of preparing International Standards is normally carried out through ISO technical committees. Each member body interested in a subject for which a technical committee has been established has the right to be represented on that committee. International organizations, governmental and non-governmental, in liaison with ISO, also take part in the work. ISO collaborates closely with the International Electrotechnical Commission (IEC) on all matters of electrotechnical standardization.

Draft International Standards adopted by the technical committees are circulated to the member bodies for approval before their acceptance as International Standards by the ISO Council. They are approved in accordance with ISO procedures requiring at least 75 % approval by the member bodies voting.

iTeh STANDARD PREVIEW
(standards.iteh.ai)

International Standard ISO 3410 was prepared by Technical Committee ISO/TC 41, *Pulleys and belts (including veebelts).*

ISO 3410:1989
https://standards.iteh.ai/catalog/standards/sist/848be405-e621-4a52-a670-

This second edition cancels and replaces the first edition (ISO 3410 : 1976), of which it constitutes a technical revision.

Annex A of this International Standard is for information only.

© ISO 1989
All rights reserved. No part of this publication may be reproduced or utilized in any form or by any means, electronic or mechanical, including photocopying and microfilm, without permission in writing from the publisher.

International Organization for Standardization
Case postale 56 • CH-1211 Genève 20 • Switzerland
Printed in Switzerland

Agricultural machinery — Endless variable-speed V-belts and groove sections of corresponding pulleys

1 Scope

This International Standard specifies the main dimensions of endless variable-speed V-belts intended for use on agricultural machinery (and, in particular, harvester-thresher machines), together with the groove section of the corresponding fixed- or variable-diameter pulleys.

2 Normative references

The following standards contain provisions which, through reference in this text, constitute provisions of this International Standard. At the time of publication, the editions indicated were valid. All standards are subject to revision, and parties to agreements based on this International Standard are encouraged to investigate the possibility of applying the most recent editions of the standards listed below. Members of IEC and ISO maintain registers of currently valid International Standards.

iTeh STANDARD PREVIEW
(standards.iteh.ai)
ISO 3410:1989
https://standards.iteh.ai/catalog/standards/sist/848bc405-e621-4a52-a670-1fedbcdacc11/iso-3410-1989

ISO 3 : 1973, *Preferred numbers — Series of preferred numbers.*

ISO 1081 : 1980, *Drives using V-belts and pulleys — Terminology.*

ISO 9608 : 1988, *V-belts — Uniformity of belts — Centre distance variation — Specifications and test method.*

3 Definitions and symbols

For the purposes of this International Standard, the terms and symbols relating to drives using V-belts (i.e. belts and grooved pulleys) defined in ISO 1081 apply.

4 Dimensions and tolerances

4.1 Belts

4.1.1 General

An endless variable-speed V-belt on agricultural machinery transmits a high degree of force per unit of section; when it approaches a groove pulley, its cross-section undergoes appreciable deformations. For this reason, the various dimensions which are defined hereunder are to be taken as being those of the belt placed on the device used for the measurement of its length, and subjected to the force F. The dimensions w_p, B, W and T are those relating to the parts of the belt when in contact with the measuring pulleys.

4.1.2 Cross-sections (see figure 1)

The cross-section is characterized by a "relative height" (relation of height T of sides to pitch width w_p) which, on average, is in the region of 0,5; the pitch line is shown as being at approximately one-third of the height of the profile below the large base of the trapezium. The cross-sectional dimensions are given in table 2.

4.1.3 Lengths

The range of datum lengths is that of the R 40 series of preferred numbers (see ISO 3) from 630 mm to 5 000 mm (see table 3). If intermediate values are required, they shall be taken from the R 80 series of preferred numbers (see ISO 3).

4.1.4 Tolerance on length

The length of the belts is affected by the maximum admissible variations of $^{+\,p/2}_{-\,p}$, where p is calculated, with a certain amount of approximation, using the formula

$$p = 0{,}8\sqrt[3]{L} + 0{,}006\,L$$

L being the preferred number from the R 10 series equal to or immediately greater than the datum length, expressed in millimetres.

4.1.5 Centre distance variations

Centre distance variations are given in relation to the belt top width in table 1.

Table 1 — Centre distance variations

Dimensions in millimetres

Belt length		Top width	
over	up to (inclusive)	⩽ 25	> 25
		ΔE	
—	1 000	1,2	1,8
1 000	2 000	1,6	2,2
2 000	5 000	2	3,4
5 000	—	2,5	3,4

4.2 Grooved pulleys

These belts are almost always used with two variable-diameter pulleys (type 2), one of these pulleys possibly allowing for the release of the drive (type 3); more rarely, this type of belt can be made to function jointly with a fixed-diameter pulley (type 1). Table 4 gives, for each of these types, the datum diameter minimum values and radial dimensions of the groove.

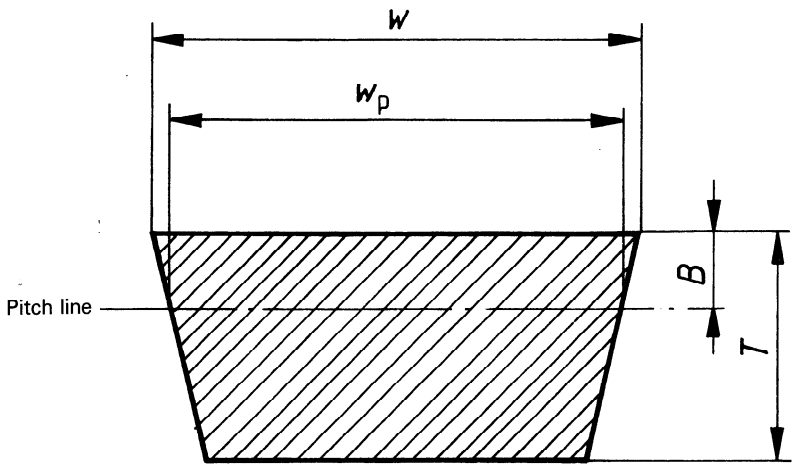

Figure 1 — Cross-section

5 Measuring and checking

5.1 Checking of belts

5.1.1 Measuring device

The device recommended, shown in sketch-form in figure 3, consists essentially of two grooved pulleys of similar functional dimensions, one of which is movable in the same plane as the pulley by force F (table 5).

Rotate the belt to make at least two complete revolutions of the belt, then measure the distance E between centres of the two pulleys.

Table 2 — Cross-sectional dimensions

Dimensions in millimetres

Profile	HG	HH	HI	HJ	HK	HL	HM	HN	HO
w_p	15,4	19	23,6	29,6	35,5	41,4	47,3	53,2	59,1
w nom.	16,5	20,4	25,4	31,8	38,1	44,5	50,8	57,2	63,5
T nom.	8	10	12,7	15,1	17,5	19,8	22,2	23,9	25,4
B 1)	2,5	3	3,8	4,7	5,7	6,6	7,6	8,5	9,5

1) Approximate expression : $B = 0{,}16\ w_p$

Table 3 — Belt lengths

Datum length, L_d nom.	tol. $+p/2$	tol. $-p$	Profile HG	HH	HI	HJ	HK	HL	HM	HN	HO
mm											
630	5	10	×								
670	5	10	×								
710	6	12	×								
750	6	12	×								
800	6	12	×	×							
850	6	12	×	×							
900	7	14	×	×							
950	7	14	×	×							
1 000	7	14	×	×	×						
1 060	8	16	×	×	×						
1 120	8	16	×	×	×						
1 180	8	16		×	×						
1 250	8	16		×	×						
1 320	9	18		×	×						
1 400	9	18		×	×	×					
1 500	9	18		×	×	×					
1 600	9	18		×	×	×	×				
1 700	11	22			×	×	×				
1 800	11	22			×	×	×				
1 900	11	22				×	×				
2 000	11	22				×	×	×	×		
2 120	13	26				×	×	×	×	×	
2 240	13	26				×	×	×	×	×	×
2 360	13	26				×	×	×	×	×	×
2 500	13	26					×	×	×	×	×
2 650	15	30					×	×	×	×	×
2 800	15	30					×	×	×	×	×
3 000	15	30					×	×	×	×	×
3 150	15	30						×	×	×	×
3 350	18	36						×	×	×	×
3 550	18	36						×	×	×	×
3 750	18	36						×	×	×	×
4 000	18	36						×	×	×	×
4 250	22	44							×	×	×
4 500	22	44							×	×	×
4 750	22	44							×	×	×
5 000	22	44							×	×	×

NOTE — Reduced length tolerances may be used in national standards or by agreement between manufacturer and user.

iTeh STANDARD PREVIEW
(standards.iteh.ai)
ISO 3410:1989
https://standards.iteh.ai/catalog/standards/sist/84fbe402-e621-4a52-a670-17e66e8dcc1f/iso-3410-1989

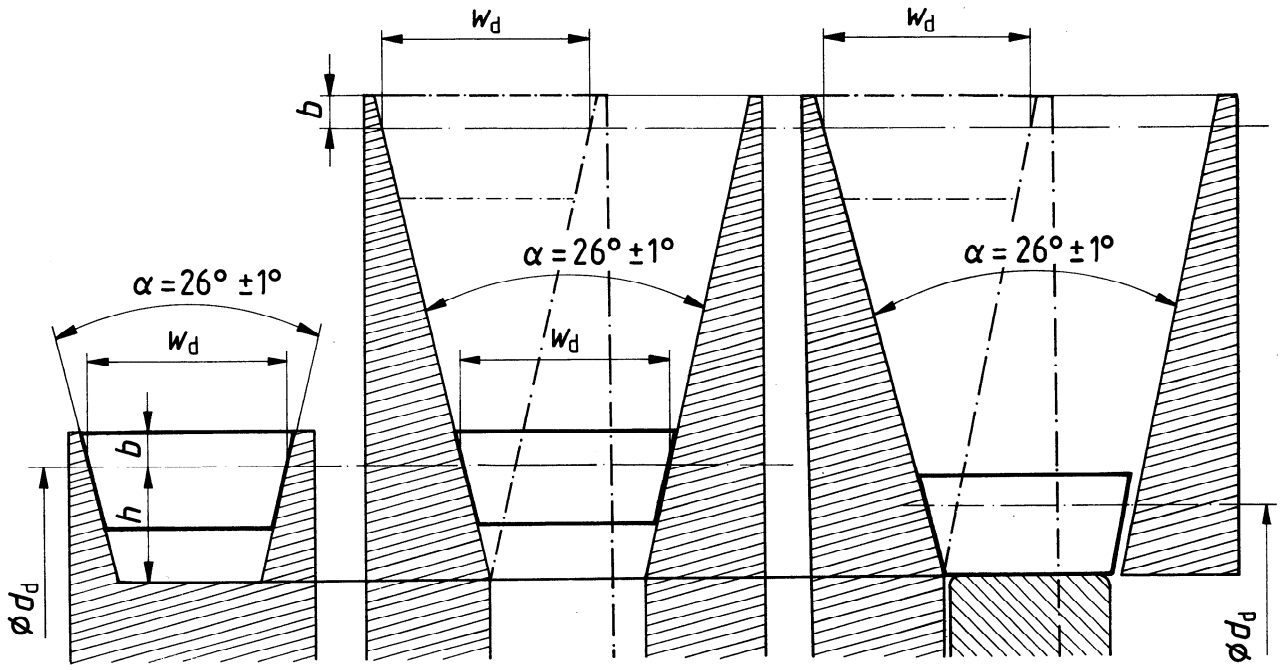

a) Type 1 — Fixed diameter b) Type 2 — Variable diameter c) Type 3 — Variable diameter, allowing drive release

Figure 2 — Pulleys

iTeh STANDARD PREVIEW
(standards.iteh.ai)
ISO 3410:1989
https://standards.iteh.ai/catalog/standards/sist/3e8be44f-c62f-4a52-6670-17e66e8fcc1f/iso-3410-1989

Table 4 — Dimensions of pulleys

Dimensions in millimetres

Pulley type	Dimension	Approximate expression	Profile HG	HH	HI	HJ	HK	HL	HM	HN	HO
1-2-3	w_d		15,4	19	23,6	29,6	35,5	41,4	47,3	53,2	59,1
1-2-3	b min.	0,16 w_d	2,5	3	3,8	4,7	5,7	6,6	7,6	8,5	9,5
1-2 3	d_d min.	3,55 w_d 3,15 w_d	55 49	68 60	84 74	105 93	126 112	147 130	168 149	189 168	210 186
1-2 3	h min.	0,535 w_d $T - B$	8 5,5	10 7	13 8,9	16 10,4	19 11,8	22 13,2	25 14,6	28 15,4	32 15,9

NOTE — The values of d_d min. and h min. have been rounded.

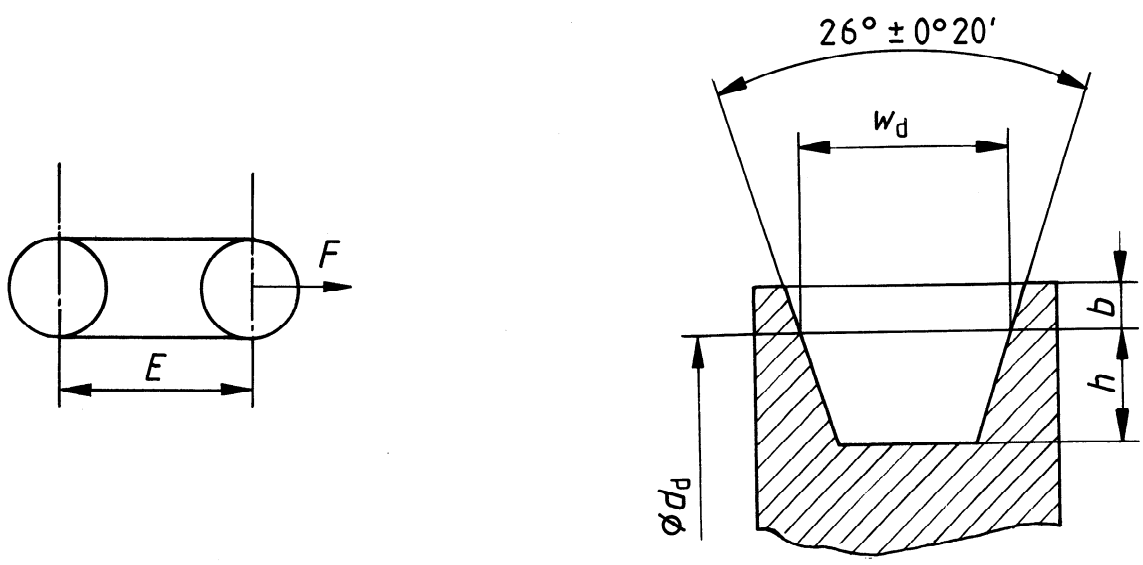

Figure 3 — Measuring device

Table 5 — Dimensions of measuring pulleys, and measuring forces

Dimension		Approximate expression	Profile HG	HH	HI	HJ	HK	HL	HM	HN	HO
w_d	mm		15,4	19	23,6	29,6	35,5	41,4	47,3	53,2	59,1
b	mm	0,16 w_d	2,5	3	3,8	4,7	5,7	6,6	7,6	8,5	9,5
h min.	mm	0,535 w_d	8	10	13	16	19	22	25	28	32
d_d	mm	5,3 w_d *)	95,49 ±0,13	95,49 ±0,13	127,32 ±0,13	159,16 ±0,13	190,99 ±0,13	222,82 ±0,13	254,65 ±0,13	286,48 ±0,13	318,31 ±0,13
C_d	mm	17 w_d *)	300	300	400	500	600	700	800	900	1 000
F	N	1,46 w_d^2 **)	350	530	800	1 300	1 800	2 500	3 300	3 300	3 300

*) Except for HG and HH.

**) Except for HN and HO.

NOTE — Belt ride-out shall be between −0,8 mm and + 4,1 mm, except for HN and HO, for which the belt ride-out shall be between −0,8 mm and 5,6 mm.

5.1.2 Checking belt length

The datum length of the belt — i.e. its length measured at the level where its width is equal to the pitch width, w_p — is obtained by the formula

$$L_d = 2E + C_d$$

where

E is the distance between axes, measured in accordance with 5.1.1;

C_d is the datum circumference of the control pulleys (see table 5).

5.1.3 Checking centre distance variation

Centre distance variations shall be checked in accordance with ISO 9608.

5.2 Groove section of measuring pulleys

Only the values w_d, C_d and the angle of the groove are of importance; the radial dimensions b and h as given on the figures and in table 5 are supplied only for information.

5.3 Groove checking of measuring pulleys

5.3.1 Principle

The groove of measuring pulleys can be checked by means of two rods, the diameter d of which is given in table 6. The diameters d have been determined so that the simultaneous contact of each rod with the two sides is made at the level of the datum circumference.

5.3.2 Checking method

Place the two rods in the groove to be checked and put them in contact with the latter, so that their axes are parallel (see figure 4).

Then measure the distance K between the tangent planes to the rods outside of the pulley and parallel to the axis of the latter.

The measured value of K shall be that given in table 6.

iTeh STANDARD PREVIEW
(standards.iteh.ai)
ISO 3410:1989
https://standards.iteh.ai/catalog/standards/sist/848be405-e621-4a52-a670-
7c7e8dcc1f/iso-3410-1989

Table 6 — Rod diameters and values of K

Dimensions in millimetres

Type	d nom.	d tol.[1]	K nom.	K tol.
HG	15,805	+ 0,005 − 0,003	114,85	±0,2
HH	19,5	+ 0,005 − 0,004	119,38	
HI	24,221		156,99	
HJ	30,379	+ 0,006 − 0,005	196,37	
HK	36,434		235,62	
HL	42,489		274,87	
HM	48,544		314,11	
HN	54,599	+ 0,006 − 0,007	353,36	
HO	60,655		392,61	

1) Tolerance j5: see ISO 286-2.

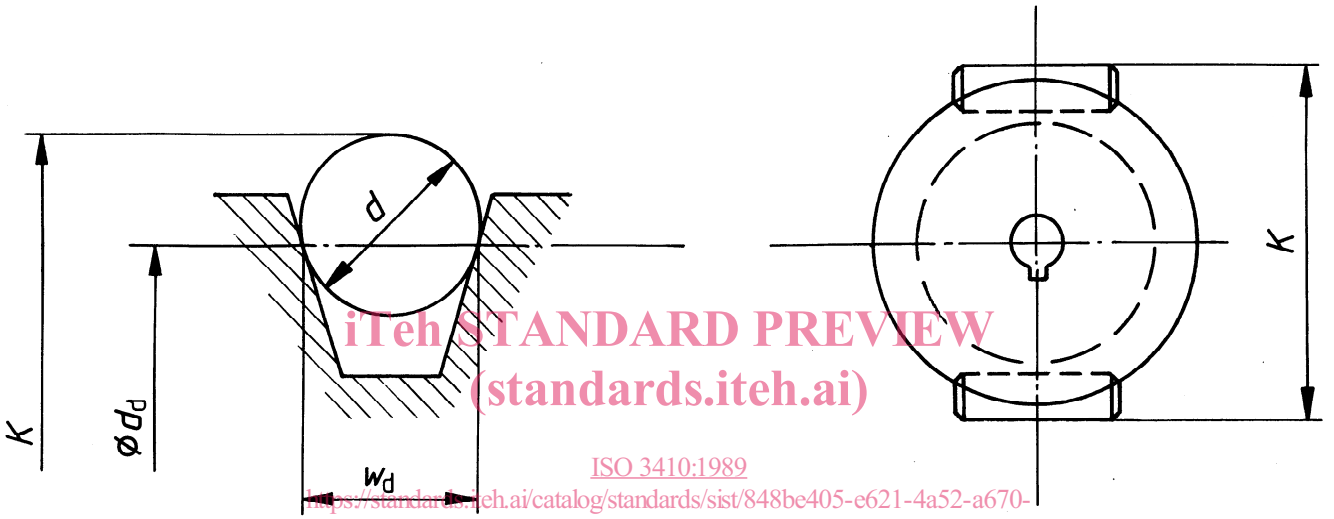

iTeh STANDARD PREVIEW
(standards.iteh.ai)
ISO 3410:1989
https://standards.iteh.ai/catalog/standards/sist/848be405-e621-4a52-a670-17e66e8dcc1f/iso-3410-1989

Figure 4 — Checking method for groove diameter

Annex A
(informative)

Bibliography

ISO 286-2 : 1988, *ISO system of limits and fits — Part 2 : Tables of standard tolerance grades and limit deviations for holes and shafts.*

iTeh STANDARD PREVIEW
(standards.iteh.ai)

ISO 3410:1989
https://standards.iteh.ai/catalog/standards/sist/848be405-e621-4a52-a670-17e66e8dcc1f/iso-3410-1989

UDC 621.85.052.42/.051 : 631.3

Descriptors : agricultural machinery, variable speed drives, belt drives, power transmission belts, V-belts, pulleys, grooved pulleys, specifications, dimensions, dimensional measurements.

Price based on 6 pages