SLOVENSKI STANDARD
SIST EN 300 417-5-1 V1.2.1:2003

01-december-2003

Prenos in multipleksiranje (TM) ï Generiļ ne zahteve za prenosno funkcionalnost opreme ï 5-1. del: Funkcije plasti poti pri pleziohroni digitalni hierarhiji (PDH)

Transmission and Multiplexing (TM); Generic requirements of transport functionality of equipment; Part 5-1: Plesiochronous Digital Hierarchy (PDH) path layer functions

Ta slovenski standard je istoveten z: EN 300 417-5-1 Version 1.2.1

ICS:

33.040.20 Prenosni sistem Transmission systems

SIST EN 300 417-5-1 V1.2.1:2003 en

ETSI EN 300 417-5-1 V1.2.1 (2001-10)

European Standard (Telecommunications series)

Transmission and Multiplexing (TM); Generic requirements of transport functionality of equipment; Part 5-1: Plesiochronous Digital Hierarchy (PDH) path layer functions

Reference
REN/TM-01042-5-1

Keywords
architecture, path, PDH, SDH, transmission, transport

ETSI

650 Route des Lucioles
F-06921 Sophia Antipolis Cedex - FRANCE

Tel.: +33 4 92 94 42 00 Fax: +33 4 93 65 47 16

Siret N° 348 623 562 00017 - NAF 742 C
Association à but non lucratif enregistrée à la
Sous-Préfecture de Grasse (06) N° 7803/88

Important notice

Individual copies of the present document can be downloaded from:
http://www.etsi.org

The present document may be made available in more than one electronic version or in print. In any case of existing or perceived difference in contents between such versions, the reference version is the Portable Document Format (PDF). In case of dispute, the reference shall be the printing on ETSI printers of the PDF version kept on a specific network drive within ETSI Secretariat.

Users of the present document should be aware that the document may be subject to revision or change of status. Information on the current status of this and other ETSI documents is available at
http://portal.etsi.org/tb/status/status.asp

If you find errors in the present document, send your comment to:
editor@etsi.fr

Copyright Notification

Contents

Intellectual Property Rights

IPRs essential or potentially essential to the present document may have been declared to ETSI. The information pertaining to these essential IPRs, if any, is publicly available for **ETSI members and non-members**, and can be found in ETSI SR 000 314: *"Intellectual Property Rights (IPRs); Essential, or potentially Essential, IPRs notified to ETSI in respect of ETSI standards"*, which is available from the ETSI Secretariat. Latest updates are available on the ETSI Web server (http://www.etsi.org/legal/home.htm).

Pursuant to the ETSI IPR Policy, no investigation, including IPR searches, has been carried out by ETSI. No guarantee can be given as to the existence of other IPRs not referenced in ETSI SR 000 314 (or the updates on the ETSI Web server) which are, or may be, or may become, essential to the present document.

Foreword

This European Standard (Telecommunications series) has been produced by ETSI Technical Committee Transmission and Multiplexing (TM).

The present document is one of a family of documents that has been produced in order to provide inter-vendor and inter-operator compatibility of Synchronous Digital Hierarchy (SDH) equipment.

The present document is part 5, sub-part 1 of a multi-part deliverable covering the Generic requirements of transport functionality of equipment, as identified below:

Part 1-1: "Generic processes and performance";

Part 1-2: "General information about Implementation Conformance Statement (ICS) proforma";

Part 2-1: "Synchronous Digital Hierarchy (SDH) and Plesiochronous Digital Hierarchy (PDH) physical section layer functions";

Part 2-2: "Synchronous Digital Hierarchy (SDH) and Plesiochronous Digital Hierarchy (PDH) physical section layer functions; Implementation Conformance Statement (ICS) proforma specification";

Part 3-1: "Synchronous Transport Module-N (STM-N) regenerator and multiplex section layer functions";

Part 3-2: "Synchronous Transport Module-N (STM-N) regenerator and multiplex section layer functions; Implementation Conformance Statement (ICS) proforma specification";

Part 4-1: "Synchronous Digital Hierarchy (SDH) path layer functions";

Part 4-2: "Synchronous Digital Hierarchy (SDH) path layer functions; Implementation Conformance Statement (ICS) proforma specification";

Part 5-1: "Plesiochronous Digital Hierarchy (PDH) path layer functions";

Part 5-2: "Plesiochronous Digital Hierarchy (PDH) path layer functions; Implementation Conformance Statement (ICS) proforma specification";

Part 6-1: "Synchronization layer functions";

Part 6-2: "Synchronization layer functions; Implementation Conformance Statement (ICS) proforma specification";

Part 7-1: "Equipment management and auxiliary layer functions";

Part 9-1: "Synchronous Digital Hierarchy (SDH) concatenated path layer functions; Requirements".

Parts 2 to 7 specify the layers and their atomic functions.

NOTE: The SDH radio equipment functional blocks are addressed by ETSI WG TM4.

Various of the above parts have previously been published as parts of ETS 300 417.

National transposition dates	
Date of adoption of this EN:	12 October 2001
Date of latest announcement of this EN (doa):	31 January 2002
Date of latest publication of new National Standard or endorsement of this EN (dop/e):	31 July 2002
Date of withdrawal of any conflicting National Standard (dow):	31 July 2002

Introduction

The atomic PDH path layer functions are defined below used in plesiochronous and synchronous operation. They describe the functionality of PDH multiplex equipments described in the ITU-T Recommendations G.751 [7] and G.742 [6] for signal hierarchies P4e, P31e and P22e. In addition they describe the functionality of synchronous PDH equipment described in EN 300 167 [2] for P12s layer signals, and ETS 300 337 [10] for P31s and P4s signals.

1 Scope

The present document specifies a library of basic building blocks and a set of rules by which they are combined in order to describe a digital transmission equipment. The library comprises the functional building blocks needed to completely specify the generic functional structure of the European digital transmission hierarchy. Equipment which is compliant with the present document can be described as an interconnection of a subset of these functional blocks contained within the present document. The interconnections of these blocks should obey the combination rules given. The generic functionality is described in the EN 300 417-1-1 [9].

2 References

The following documents contain provisions which, through reference in this text, constitute provisions of the present document.

- References are either specific (identified by date of publication, edition number, version number, etc.) or non-specific.
- For a specific reference, subsequent revisions do not apply.
- For a non-specific reference, the latest version applies.

[1] ETSI EN 300 147: "Transmission and Multiplexing (TM); Synchronous Digital Hierarchy (SDH); Multiplexing structure".

[2] ETSI EN 300 167: "Transmission and Multiplexing (TM); Functional characteristics of 2 048 kbit/s interfaces".

[3] ITU-T Recommendation G.703: "Physical/electrical characteristics of hierarchical digital interfaces".

[4] ITU-T Recommendation G.704: "Synchronous frame structures used at 1 544, 6 312, 2 048, 8 488 and 44 736 kbit/s hierarchical levels".

[5] ITU-T Recommendation G.706: "Frame alignment and cyclic redundancy check (CRC) procedures relating to basic frame structures defined in Recommendation G.704".

[6] ITU-T Recommendation G.742 (1988): "Second order digital multiplex equipment operating at 8 448 kbit/s and using positive justification".

[7] ITU-T Recommendation G.751 (1988): "Digital multiplex equipments operating at the third order bit rate of 34 368 kbit/s and the fourth order bit rate of 139 264 kbit/s and using positive justification".

[8] ITU-T Recommendation G.823: "The control of jitter and wander within digital networks which are based on the 2 048 kbit/s hierarchy".

[9] ETSI EN 300 417-1-1: "Transmission and Multiplexing (TM); Generic requirements of transport functionality of equipment; Part 1-1: Generic processes and performance".

[10] ETSI ETS 300 337: "Transmission and Multiplexing (TM); Generic frame structures for the transport of various signals (including Asynchronous Transfer Mode (ATM) cells and Synchronous Digital Hierarchy (SDH) elements) at the ITU-T Recommendation G.702 hierarchical rates of 2 048 kbit/s, 34 368 kbit/s and 139 264 kbit/s".

[11] ETSI EN 300 417-4-1: "Transmission and Multiplexing (TM); Generic requirements of transport functionality of equipment; Part 4-1: Synchronous Digital Hierarchy (SDH) path layer functions".

[12] ETSI EN 300 417-6-1: "Transmission and Multiplexing (TM); Generic requirements of transport functionality of equipment; Part 6-1: Synchronization layer functions".

[13] ETSI EN 301 163: "Transmission and Multiplexing (TM); Generic requirements of Asynchronous Transfer Mode (ATM) transport functionality within equipment".

[14] ETSI EN 300 166: "Transmission and Multiplexing (TM); Physical and electrical characteristics of hierarchical digital interfaces for equipment using the 2 048 kbit/s - based plesiochronous or synchronous digital hierarchies".

[15] ITU-T Recommendation Q.522: "Digital exchange connections, signalling and ancillary functions".

[16] ITU-T Recommendation G.711: "Pulse code modulation (PCM) of voice frequencies".

3 Definitions, abbreviations and symbols

3.1 Definitions

The functional definitions are described in the EN 300 417-1-1 [9].

3.2 Abbreviations

For the purposes of the present document, the following abbreviations apply:

A	Adaptation function
AcTI	Accepted Trace Identifier
AI	Adapted Information
AIS	Alarm Indication Signal
AP	Access Point
ATM	Asynchronous Transfer Mode
Avp	ATM VP layer
BIP	Bit Interleaved Parity
C	Connection function
CH	CHannel
CI	Characteristic Information
CK	ClocK
CM	Connection Matrix
Co	Connection
CP	Connection Point
D	Data
DCC	Data Communications Channel
DEC	DECrement
DEG	DEGraded
DEGTHR	DEGraded THReshold
DL	Data Link
E12	Electrical interface signal 2 048 kbit/s
E31	Electrical interface signal 34 368 kbit/s
E4	Electrical interface signal 139 264 kbit/s
EBC	Errored Block Count
EDC	Error Detection Code
EDCV	Error Detection Code Violation
EMF	Equipment Management Function
EQ	EQuipment
Ex	ITU-T Recommendation G.703 [3] type Electrical signal, bit rate order x
ExTI	Expected Trace Identifier
F_B	Far-end Block
FAS	Frame Alignment Signal
FASE	Frame Alignment Signal Error
FO	Frame Offset information
FS	Frame Start signal
HO	Higher Order

ID	IDentifier
IF	In Frame state
INC	INCrement
IS	Intermediate System
ISDN	Integrated Services Digital Network
LC	Link Connection
LO	Lower Order
LOF	Loss Of Frame
LOM	Loss Of Multiframe
LOP	Loss Of Pointer
LT	Line Termination
MFP	MultiFrame Present
MI	Management Information
MON	MONitored
N_B	Near-end Block
NC	Network Connection
NCI	No CRC-4 Multiframe Indication
NE	Network Element
NU	National Use (bits, bytes)
OOF	Out Of Frame state
OS	Operations System
OS	Optical Section
OSC	OSCillator
P	Protection
P0s	64 kbit/s layer (transparent)
P11x	1 544 kbit/s layer (transparent)
P12s	2 048 kbit/s PDH path layer with synchronous 125 µs frame structure as specified in EN 300 167 [2]
P12x	2 048 kbit/s layer (transparent)
P22e	8 448 kbit/s PDH path layer with 4 plesiochronous 2 048 kbit/s
P22x	8 448 kbit/s layer (transparent)
P31e	34 368 kbit/s PDH path layer with 4 plesiochronous 8 448 kbit/s
P31s	34 368 kbit/s PDH path layer with synchronous 125 µs frame structure as specified in ETS 300 337 [10]
P31x	34 368 kbit/s layer (transparent)
P32x	44 736 kbit/s layer (transparent)
P4e	139 264 kbit/s PDH path layer with 4 plesiochronous 34 368 kbit/s
P4s	139 264 kbit/s PDH path layer with synchronous 125 µs frame structure as specified in ETS 300 337 [10]
P4x	139 264 kbit/s layer (transparent)
PDH	Plesiochronous Digital Hierarchy
PEC	PDH Equipment Clock
PLM	PayLoad Mismatch
POH	Path OverHead
PRC	Primary Reference Clock
PS	Protection Switching
PU	PDH Unit
RDI	Remote Defect Indicator
REI	Remote Error Indicator
RI	Remote Information
RNCI	Remote No CRC-4 Multiframe Indication
RS	Regenerator Section
RS1	STM-1 Regenerator Section
RxTI	Received Trace identifier
SD	synchronization distribution layer, Signal Degrade
SES	Severely Errored Second
SF	Signal Fail
Sk	Sink
SNC	Sub-Network Connection
So	Source
SOH	Section OverHead

SSF	Server Signal Fail
SSM	Synchronization Status Message
TD	Transmit Degrade
TF	Transmit Fail
TI	Timing Information
TIM	Trace Identifier Mismatch
TM	Transmission_Medium
TP	Timing Point
TPmode	Termination Point mode
TR	Threshold Report
TS	Time Slot
TSD	Trail Signal Degrade
TSF	Trail Signal Fail
TT	Trail Termination function
TTI	Trail Trace Identifier
TU	Tributary Unit
TUG	Tributary Unit Group
TxTI	Transmitted Trace Identifier
UNEQ	Unequipped
VC	Virtual Container
VP	Virtual Path
W	Working

3.3 Symbols and Diagrammatic Conventions

The symbols and diagrammatic conventions are described in the EN 300 417-1-1 [9].

4 P4e path layer functions

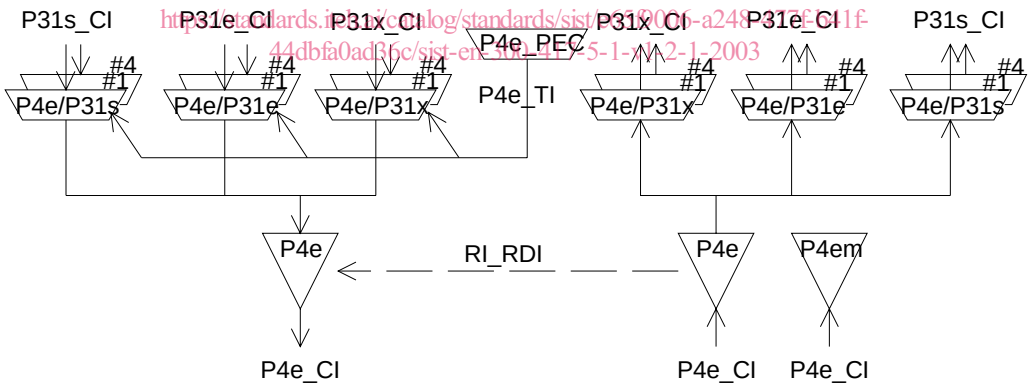

Figure 1: P4e path layer atomic functions

P4e layer CP

The Characteristic Information (CI) at this point is 139 264 kbit/s bit structured signal as specified in ITU-T Recommendation G.751 [7] with co-directional bit timing and the frame start information FS. The CI is structured to form a 2 928 bit long frame with 16 bit frame overhead containing 12 bit FAS, one bit RDI and a three bit user CI.

NOTE 1: The bits for National Use (NU) in row 4, columns 2 to 4 of figure 2 are reserved for operator specific usage. Their processing is not within the province of the present document.

P4e layer AP

The AI at this point is a multiplexed signal containing four (728/2 928) × 139 264 kbit/s (see note 2) tributary signals (PU31) and (3/2 928) × 139 264 kbit/s (see note 3) user CI (NU) with co-directional bit timing and frame start information.

NOTE 2: This equations equals a bitrate of 34 625,748 633 879 8 kbit/s.

NOTE 3: This equations equals a bitrate of 142,688 524 590 164 kbit/s.

The signal transported by a PU31 will be determined by the client layer application. Typical signals include:

- a 34 368 kbit/s signal P31x_CI without an assumed structure and justification overhead bits;
- a 34 368 kbit/s signal P31e_CI with a frame structure as specified in ITU-T Recommendation G.751 [7] and justification overhead bits;
- a 34 368 kbit/s signal P31s_CI with a frame structure as specified in ETS 300 337 [10] and justification overhead bits.

Figure 1 shows that more than one adaptation function exists in this P4e layer that can be connected to one P4e access point. For the case of the adaptation source functions, only one of these adaptation source functions is allowed to be activated. For this activated source, access to the access point by other adaptation source functions shall be denied. In contradiction with the source direction, adaptation sink functions may be activated all together. This may cause faults (e.g. cLOF) to be detected and reported. To prevent this an adaptation sink function can be deactivated.

NOTE 4: If one adaptation function only is connected to the AP, it will be activated. If one or more other functions are connected to the same AP, one out of the set of functions will be active.

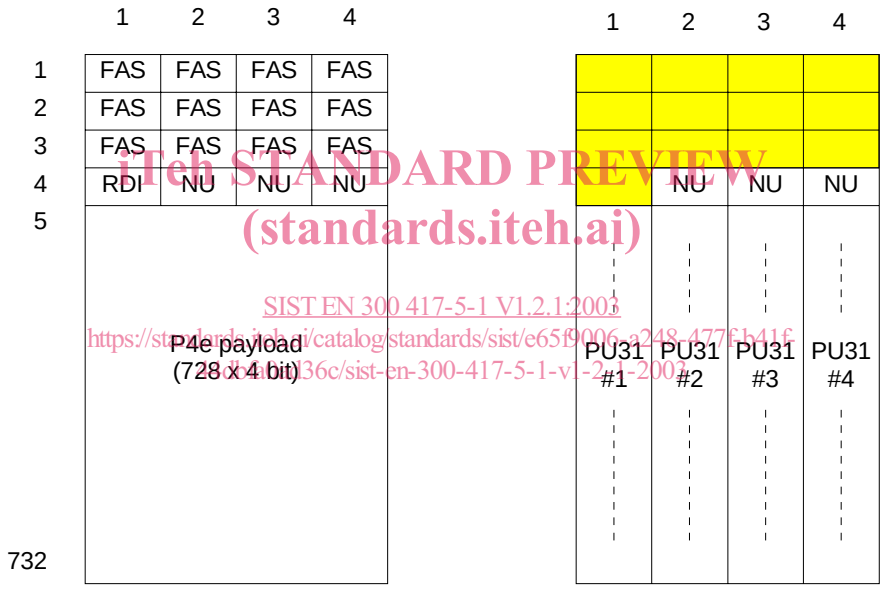

Figure 2: P4e_CI_D (left) and P4e_AI_D (right) signals