International Standard 6053

INTERNATIONAL ORGANIZATION FOR STANDARDIZATION•МЕЖДУНАРОДНАЯ ОРГАНИЗАЦИЯ ПО СТАНДАРТИЗАЦИИ•ORGANISATION INTERNATIONALE DE NORMALISATION

Photography — Shutter cable release tip and socket — Dimensions

Photographie — Embout et prise du déclencheur souple — Dimensions

First edition — 1979-12-15

Sample Document

get full document from standards.iteh.ai

UDC 771.368.2 **Ref. No. ISO 6053-1979 (E)**

Descriptors : photography, photographic equipment, flexible shutter release, fitting ends, junction, specifications, screw threads, dimensions.

Price based on 2 pages

ISO 6053:1979 • https://standards.iteh.ai/catalog/standards/iso/03981d40-063b-4132-9f95-9d024f8349e1/iso-6053-1979

Foreword

ISO (the International Organization for Standardization) is a worldwide federation of national standards institutes (ISO member bodies). The work of developing International Standards is carried out through ISO technical committees. Every member body interested in a subject for which a technical committee has been set up has the right to be represented on that committee. International organizations, governmental and non-governmental, in liaison with ISO, also take part in the work.

Draft International Standards adopted by the technical committees are circulated to the member bodies for approval before their acceptance as International Standards by the ISO Council.

International Standard ISO 6053 was developed by Technical Committee ISO/TC 42, *Photography*, and was circulated to the member bodies in August 1977.

Sample Document
get full document from standards.iteh.ai

It has been approved by the member bodies of the following countries :

Australia	France	Switzerland
Austria	Germany, F. R.	Turkey
Belgium	Italy	United Kingdom
Canada	Japan	USA
Czechoslovakia	South Africa, Rep. of	USSR
Egypt, Arab Rep. of	Spain	Yugoslavia

No member body expressed disapproval of the document.

© **International Organization for Standardization, 1979** •

Printed in Switzerland

ISO 6053:1979 • https://standards.iteh.ai/catalog/standards/iso/03981d40-063b-4132-9f95-9d024f8349e1/iso-6053-1979

Photography — Shutter cable release tip and socket — Dimensions

0 Introduction

This International Standard has been prepared with a view to ensuring the international interchangeability of cable releases.

1 Scope and field of application

This International Standard specifies the shape, basic dimensions and technical requirements of the screw threads of the shutter cable release tip and socket.

2 Shape, basic dimensions and tolerances

2.1 Tip and socket

The shape and dimensions shall be as shown in figures 1 to 4.

2.2 Screw threads

The profile and basic dimensions shall be as shown in figures 5 and 6.

3 Constructional details

3.1 Tip

The extension of the plunger beyond the end of the tip shall be 12 mm minimum. When the cable release is relaxed, the plunger shall not extend beyond the end of the tip.

There shall be no failure of the cable when a resisting force of 20 N* is applied to the guided plunger.

3.2 Socket

The socket shall be designed in two variants :

Type 1 — with tapered threads (Figure 2);

Type 2 — with parallel threads (Figures 3 and 4).

The socket of Type 1 is preferable.

The socket of Type 2 is permissible in a shutter release if the release force does not exceed 10 N.

In the case of Type 2a socket, the cone shall be so constructed as to guide the plunger of the cable release smoothly into the hole.

Sample Document
get full document from standards.iteh.ai

3.3 Profile, tapered threads

The bisector of the flank angle shall be perpendicular to the bolt axis, and the thread pitch shall be measured parallel to the axis of the bolt.

The maximum deviation of half the flank angle shall be ± 30′.

The maximum deviation of the thread pitch shall be ± 0,02 mm between any two turns.

Dimensions in millimetres

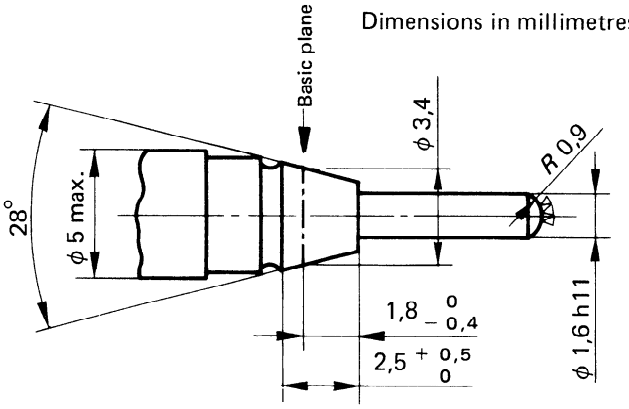

Figure 1 — Tip

* 1 N ≈ 0,1 kgf

ISO 6053:1979 • https://standards.iteh.ai/catalog/standards/iso/03981d40-063b-4132-9f95-9d024f8349e1/iso-6053-1979