SLOVENSKI STANDARD
SIST EN 12681-1:2027

01-januar-2027

Livarstvo - Radiografsko preskušanje - 1. del: Filmske tehnike

Founding - Radiographic testing - Part 1: Film techniques

Gießereiwesen - Durchstrahlungsprüfung - Teil 1: Filmtechniken

Fonderie - Contrôle par radiographie - Partie 1 : Techniques à l'aide de films

Sample Document

Ta slovenski standard je istoveten z: **EN 12681-1:2026**

---

get full document from standards.iteh.ai

ICS:

77.040.20	Neporušitveno preskušanje kovin	Non-destructive testing of metals

SIST EN 12681-1:2027 **en,fr,de**

2003-01.Slovenski inštitut za standardizacijo. Razmnoževanje celote ali delov tega standarda ni dovoljeno.

Sample Document

get full document from standards.iteh.ai

SIST EN 12681-1:2027

EUROPEAN STANDARD

NORME EUROPÉENNE

EUROPÄISCHE NORM

EN 12681-1

November 2026

ICS 77.040.20

Supersedes EN 12681-1:2017

English Version

Founding - Radiographic testing - Part 1: Film techniques

Fonderie - Contrôle par radiographie - Partie 1 : Techniques à l'aide de films

Gießereiwesen - Durchstrahlungsprüfung - Teil 1: Filmtechniken

This European Standard was approved by CEN on 11 October 2026.

CEN members are bound to comply with the CEN/CENELEC Internal Regulations which stipulate the conditions for giving this European Standard the status of a national standard without any alteration. Up-to-date lists and bibliographical references concerning such national standards may be obtained on application to the CEN-CENELEC Management Centre or to any CEN member.

This European Standard exists in three official versions (English, French, German). A version in any other language made by translation under the responsibility of a CEN member into its own language and notified to the CEN-CENELEC Management Centre has the same status as the official versions.

CEN members are the national standards bodies of Austria, Belgium, Bulgaria, Croatia, Cyprus, Czech Republic, Denmark, Estonia, Finland, France, Germany, Greece, Hungary, Iceland, Ireland, Italy, Latvia, Lithuania, Luxembourg, Malta, Netherlands, Norway, Poland, Portugal, Republic of North Macedonia, Romania, Serbia, Slovakia, Slovenia, Spain, Sweden, Switzerland, Türkiye and United Kingdom.

Sample Document

get full document from standards.iteh.ai



EUROPEAN COMMITTEE FOR STANDARDIZATION
COMITÉ EUROPÉEN DE NORMALISATION
EUROPÄISCHES KOMITEE FÜR NORMUNG

CEN-CENELEC Management Centre: Rue de la Science 23, B-1040 Brussels

© 2026 CEN All rights of exploitation in any form and by any means reserved worldwide for CEN national Members.

Ref. No. EN 12681-1:2026 E

SIST EN 12681-1:2027 • https://standards.iteh.ai/catalog/standards/sist/84aa68424bdd4665863b7d2eb06e53aa/sisten1268112027

SIST EN 12681-1:2027

Contents

Page

European foreword 4
Introduction 5
1 Scope 6
2 Normative references 6
3 Terms and definitions 7
4 Symbols and abbreviated terms 8
5 Classification of radiographic techniques 8
6 General preparations and requirements 9
6.1 General preparations 9
6.1.1 Protection against ionizing radiation 9
6.1.2 Surface preparation and stage of manufacture 9
6.2 Agreements 9
6.3 Personnel qualification 10
7 Test arrangements 10
7.1 General 10
7.2 Single wall penetration of plane areas 10
7.3 Single wall penetration of curved areas 10
7.4 Double wall penetration of plane and curved areas 10
7.5 Choice of test arrangements for complex geometries 10
7.6 Acceptable test area dimensions 11
8 Choice of tube potential and radiation source 17
8.1 X-ray devices up to 1 000 kV 17
8.2 Other radiation sources 17
9 Film systems and metal screens 18
10 Reduction of scattered radiation 20
10.1 Metal filters and collimators 20
10.2 Interception of backscattered radiation 20
11 Source-to-object distance 20
12 Optical density *D* of radiograph 23
13 Film processing and viewing 24
13.1 Processing 24
13.2 Film viewing conditions 24
14 Techniques for increasing the covered thickness range 24
14.1 General 24
14.2 Multiple film technique 25
14.3 Contrast decreasing by higher radiation energy 26
14.4 Contrast decreasing by beam hardening 26
14.5 Contrast decreasing by thickness equalization 27
15 Requirements on radiographs 27

iTeh Standards
(https://standards.iteh.ai)
Document Preview
Sample Document
Get full document from standards.iteh.ai

SIST EN 12681-1:2027 • https://standards.iteh.ai/catalog/standards/sist/84aa68424bdd4665863b7d2eb06e53aa/sisten1268112027

SIST EN 12681-1:2027

15.1 Identification of radiograph, test area, film position plan 27
15.2 Marking of the test areas 27
15.3 Overlap of films 27
16 Verification of image quality 27
17 Influence of crystalline structure 28
18 Acceptance criteria 28
18.1 General 28
18.2 Severity levels 28
18.3 Wall section zones 28
19 Test report 29
Annex A (normative) **Minimum image quality values 31**
Annex B (normative) **Severity levels for steel castings 34**
Annex C (normative) **Severity levels for cast iron castings 37**
Annex D (normative) **Severity levels for aluminium alloy and magnesium alloy castings 40**
Annex E (normative) **Severity levels for copper alloy castings 44**
Annex F (normative) **Severity levels for titanium and titanium alloy castings 46**
Annex G (informative) **Calculation of maximum X-ray tube potentials in Figure 13 ..... 48**
Annex H (informative) **Significant technical changes between this document and the previous edition 49**
Bibliography 50

Sample Document
get full document from standards.iteh.ai

SIST EN 12681-1:2027 • https://standards.iteh.ai/catalog/standards/sist/84aa68424bdd4665863b7d2eb06e53aa/sisten1268112027

SIST EN 12681-1:2027

European foreword

This document (EN 12681-1:2026) has been prepared by Technical Committee CEN/TC 190 “Foundry technology”, the secretariat of which is held by DIN.

This European Standard shall be given the status of a national standard, either by publication of an identical text or by endorsement, at the latest by May 2027, and conflicting national standards shall be withdrawn at the latest by May 2027.

Attention is drawn to the possibility that some of the elements of this document may be the subject of patent rights. CEN shall not be held responsible for identifying any or all such patent rights.

This document supersedes EN 12681-1:2017.

The significant technical changes with respect to EN 12681-1:2017 are given in Annex H (see Table H.1).

Any feedback and questions on this document should be directed to the users’ national standards body. A complete listing of these bodies can be found on the CEN website.

According to the CEN-CENELEC Internal Regulations, the national standards organisations of the following countries are bound to implement this European Standard: Austria, Belgium, Bulgaria, Croatia, Cyprus, Czech Republic, Denmark, Estonia, Finland, France, Germany, Greece, Hungary, Iceland, Ireland, Italy, Latvia, Lithuania, Luxembourg, Malta, Netherlands, Norway, Poland, Portugal, Republic of North Macedonia, Romania, Serbia, Slovakia, Slovenia, Spain, Sweden, Switzerland, Türkiye and the United Kingdom.

Sample document
get full document from standards.iteh.ai

SIST EN 12681-1:2027 • https://standards.iteh.ai/catalog/standards/sist/84aa68424bdd4665863b7d2eb06e53aa/sisten1268112027

SIST EN 12681-1:2027

Introduction

Radiography can be used to detect internal discontinuities in a casting. The discontinuities can be gas holes, non-metallic inclusions, shrinkage, cracks, inserts or chills or inclusions that have lower or higher densities than the parent metal. This document gives acceptance criteria through severity levels.

Sample Document

get full document from standards.iteh.ai

SIST EN 12681-1:2027 • https://standards.iteh.ai/catalog/standards/sist/84aa68424bdd4665863b7d2eb06e53aa/sisten1268112027

SIST EN 12681-1:2027

1 Scope

This document gives specific procedures for industrial X-ray and gamma radiography for discontinuity detection purposes, using NDT (non-destructive testing) film techniques. This part of the EN 12681 series specifies the requirements for film radiographic testing of castings.

Films after exposure and processing become radiographs with different area of optical density. Radiographs are viewed and evaluated using industrial radiographic illuminators.

This part of the EN 12681 series specifies the recommended procedure for the choice of operating conditions and radiographic practice.

These procedures are applicable to castings produced by any casting process, especially for steel, cast iron, aluminium, cobalt, copper, magnesium, nickel, titanium, zinc and any alloys of them.

NOTE This document considers EN ISO 5579.

This document does not apply to:

— radiographic testing of castings for aerospace applications (see EN 2002-21);

— radiographic testing of welded joints (see EN ISO 17636-1);

— radiography with digital detectors (see EN 12681-2);

— radioscopic testing (see the EN 13068 series).

Sample Document

2 Normative references

The following documents are referred to in the text in such a way that some or all of their content constitutes requirements of this document. For dated references, only the edition cited applies. For undated references, the latest edition of the referenced document (including any amendments) applies.

EN ISO 5579:2013, *Non-destructive testing — Radiographic testing of metallic materials using film and X- or gamma rays — Basic rules (ISO 5579:2013)*

EN ISO 5580, *Non-destructive testing — Industrial radiographic illuminators — Minimum requirements (ISO 5580)*

EN ISO 9712, *Non-destructive testing — Qualification and certification of NDT personnel (ISO 9712)*

EN ISO 11699-1, *Non-destructive testing — Industrial radiographic film — Part 1: Classification of film systems for industrial radiography (ISO 11699-1)*

EN ISO 11699-2, *Non-destructive testing — Industrial radiographic films — Part 2: Control of film processing by means of reference values (ISO 11699-2)*

EN ISO 19232-1, *Non-destructive testing — Image quality of radiographs — Part 1: Determination of the image quality value using wire-type image quality indicators (ISO 19232-1)*

EN ISO 19232-2, *Non-destructive testing — Image quality of radiographs — Part 2: Determination of the image quality value using step/hole-type image quality indicators (ISO 19232-2)*

ISO 5576, *Non-destructive testing — Industrial X-ray and gamma-ray radiology — Vocabulary*

SIST EN 12681-1:2027 • https://standards.iteh.ai/catalog/standards/sist/84aa68424bdd4665863b7d2eb06e53aa/sisten1268112027

SIST EN 12681-1:2027

3 Terms and definitions

For the purposes of this document, the terms and definitions given in ISO 5576, EN ISO 5579 and the following apply.

ISO and IEC maintain terminology databases for use in standardization at the following addresses:

— ISO Online browsing platform: available at https://www.iso.org/obp

— IEC Electropedia: available at https://www.electropedia.org/

3.1
wall thickness
t
thickness as measured on the casting

3.2
nominal wall thickness
t_n
thickness as specified on the drawing

3.3
penetrated thickness
w
thickness of material in the direction of the radiation beam calculated on the basis of the real thicknesses of all penetrated walls

Sample Document

3.4
source size
d
size of the radiation source or focal spot size

get full document from standards.iteh.ai

[SOURCE: EN ISO 5579:2013, 3.4]

3.5
object-to-film distance
b
largest (maximum) distance between the source side of the radiographed part of the test object and the film surface measured along the central axis of the radiation beam

3.6
source-to-object distance
f
distance between the source of radiation and the source side of the test object, most distant from the film, measured along the central axis of the radiation beam

3.7
source-to-film distance
SFD
distance between the source of radiation and the film measured in the direction of the beam

Note 1 to entry: SFD = $f + b$

where

SIST EN 12681-1:2027 • https://standards.iteh.ai/catalog/standards/sist/84aa68424bdd4665863b7d2eb06e53aa/sisten1268112027

SIST EN 12681-1:2027

f is the source-to-object distance;

b is the object-to-film distance.

[SOURCE: EN ISO 5579:2013, 3.5, modified – description in words presented as formula]

4 Symbols and abbreviated terms

For the purposes of this document, the symbols and abbreviations apply:

b	object-to-film distance
d	source size
D	optical density of film
f	source-to-object distance
F	film
IQI	image quality indicator
S	source of radiation
SFD	source-to film-distance
t	wall thickness
t_n	nominal wall thickness
w	penetrated thickness

Sample Document

5 Classification of radiographic techniques

get full document from standards.iteh.ai

The radiographic techniques are divided into two testing classes:

— Testing class A: basic techniques;

— Testing class B: improved techniques.

It is recommended to perform the testing according to testing class A, if not otherwise specified in the order. Testing class B techniques are used when testing class A techniques are insufficiently sensitive.

If, for technical or industrial reasons, it is not possible to meet one of the conditions specified for testing class B, such as the type of radiation source or the source-to-object distance f, it can be agreed by contracting parties that the condition selected may be what is specified for testing class A. In film radiography the loss of sensitivity shall be compensated by an increase of minimum optical density to 3,0 or by selection of a two class better film system. The other conditions for testing class B remain unchanged, especially the image quality achieved. Because of the better sensitivity compared to testing class A, the specimen may be regarded as being tested to testing class B. This does not apply if the special SFD reductions as specified in Clause 11 for test arrangements Figure 3 and Figure 4 are used.

SIST EN 12681-1:2027 • https://standards.iteh.ai/catalog/standards/sist/84aa68424bdd4665863b7d2eb06e53aa/sisten1268112027

SIST EN 12681-1:2027

6 General preparations and requirements

6.1 General preparations

6.1.1 Protection against ionizing radiation

WARNING — Exposure of any part of the human body to X-rays or gamma-rays can be highly injurious to health. Wherever X-ray equipment or radioactive sources are in use, appropriate safety requirements shall be applied.

NOTE Local, national or international safety precautions are especially important to apply when using ionizing radiation.

6.1.2 Surface preparation and stage of manufacture

In general, surface preparation is not necessary, but where surface imperfections can cause difficulty in detecting discontinuities, the surface shall be ground smooth.

Unless otherwise specified radiography shall be carried out after the final stage of manufacture, e.g. after grinding or heat treatment.

NOTE For some aluminium and magnesium alloy castings, radiography can be carried out before heat treatment.

6.2 Agreements

Castings with a complex geometry can include areas which cannot be tested by radiography or can only be partly tested. Such areas shall be identified before starting the radiographic testing. Areas which cannot be tested by radiography shall be noted by all contracting parties and be marked on the film position plan.

Sample Document
get full document from standards.iteh.ai

The following items shall be as agreed at the time of order:

a) manufacturing stage at which castings are to be tested;

b) extent of radiographic testing;

c) test areas;

d) surface condition;

e) testing class;

f) information about the film position plan;

g) marking of test areas on the casting;

h) image quality;

i) marking of the radiographs;

j) acceptance criteria;

k) any additional items;

l) any special requirements.

SIST EN 12681-1:2027 • https://standards.iteh.ai/catalog/standards/sist/84aa68424bdd4665863b7d2eb06e53aa/sisten1268112027

SIST EN 12681-1:2027

6.3 Personnel qualification

Unless otherwise agreed, testing shall be performed by personnel qualified in accordance with EN ISO 9712 or equivalent to an appropriate level in the relevant industrial sector.

7 Test arrangements

7.1 General

The test arrangements to be used shall be in accordance with:

Figure 1 to Figure 4: for single wall penetration;

Figure 5 to Figure 7: for double wall penetration;

Figure 8 to Figure 12: for test areas of complex section.

NOTE For an explanation of the symbols in the figures, see Clause 4.

If these arrangements are not applicable, other arrangements may be used.

7.2 Single wall penetration of plane areas

The test arrangement for single wall penetration of plane areas shall be in accordance with Figure 1.

7.3 Single wall penetration of curved areas

The test arrangement for single wall penetration of curved areas shall be in accordance with either Figure 2, Figure 3 or Figure 4.

NOTE Rigid cassettes can be used if the corresponding increase of b is considered for the calculation of the distance f between the source and source side of the test object (see Clause 11).

Sample Document
get full document from standards.iteh.ai

7.4 Double wall penetration of plane and curved areas

The test arrangement for double wall penetration of plane and curved areas shall be in accordance with either Figure 5, Figure 6 or Figure 7.

In the case of test arrangements according to Figure 5, the distance of the source from the surface of the test area shall be minimized provided that the requirements of IQI are met.

In the case of test arrangements according to Figure 6 and Figure 7, the discontinuities shall be classified with reference to the single wall thickness. In the case of different wall thicknesses the reference shall be the smaller one.

Double wall penetration shall be used, as an overview technique according to Figure 7, if the geometrical conditions make other test arrangements difficult to apply or if there is a better sensitivity for detecting discontinuities by using this technique. It shall be ensured that unacceptable discontinuities are detected with sufficient certainty. The required image quality shall be met.

7.5 Choice of test arrangements for complex geometries

Unless otherwise agreed, the test arrangements for complex geometry areas shall be in accordance with Figure 8 to Figure 12 (as appropriate).

SIST EN 12681-1:2027 • https://standards.iteh.ai/catalog/standards/sist/84aa68424bdd4665863b7d2eb06e53aa/sisten1268112027

SIST EN 12681-1:2027

7.6 Acceptable test area dimensions

The test area to be captured with one radiographic film should be limited in a way that the required optical density according to Clause 12, Table 4 is met in the region of interest.

In addition to the requirements above, the angle of incident radiation in the entire region of interest shall not exceed 30°.

NOTE This value can be larger, if special orientations of discontinuities can be detected in this way or if it is the only way to test areas otherwise impossible to test.

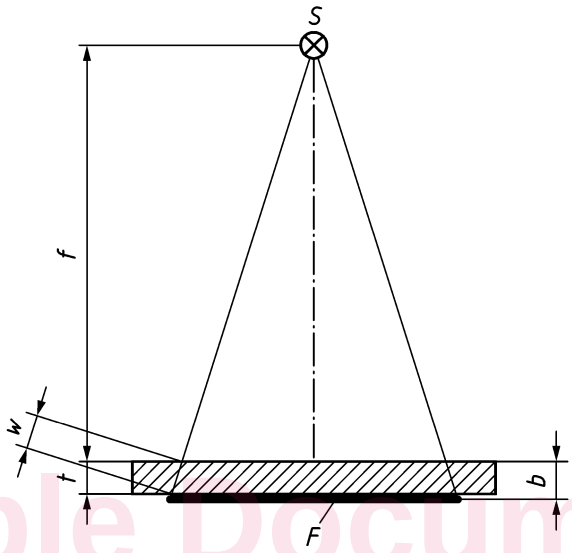

Sample Document

Figure 1 — Test arrangement for single wall penetration of plane areas

get full document from standards.iteh.ai

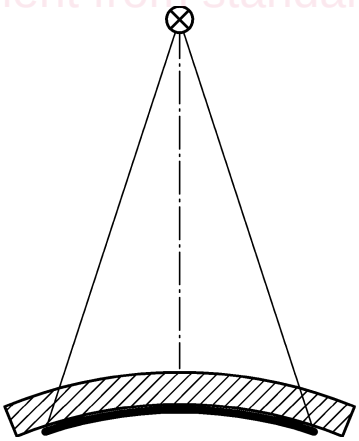

a) with flexible cassette

SIST EN 12681-1:2027 • https://standards.iteh.ai/catalog/standards/sist/84aa68424bdd4665863b7d2eb06e53aa/sisten1268112027

SIST EN 12681-1:2027

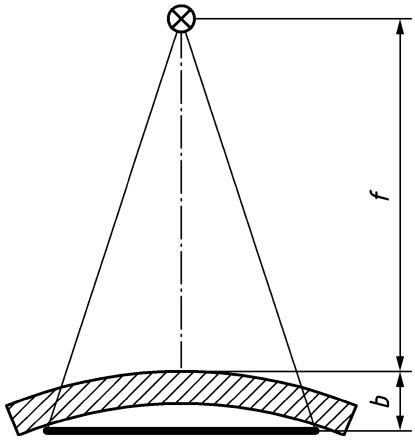

b) with rigid cassette

Figure 2 — Test arrangement for single wall penetration of curved areas with the source on the convex side and the film on the concave side of the test area

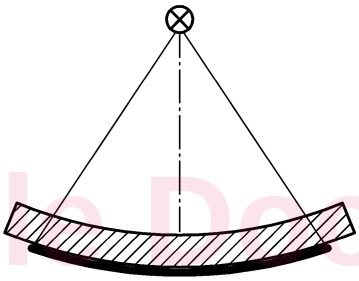

a) with flexible cassette

Sample Document
get full document from standards.iteh.ai

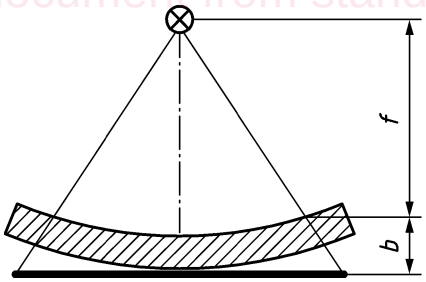

b) with rigid cassette

Figure 3 — Test arrangement for single wall penetration of curved areas with eccentric positioning of the source on the concave side and the film on the convex side of the test area

SIST EN 12681-1:2027 • https://standards.iteh.ai/catalog/standards/sist/84aa68424bdd4665863b7d2eb06e53aa/sisten1268112027

SIST EN 12681-1:2027

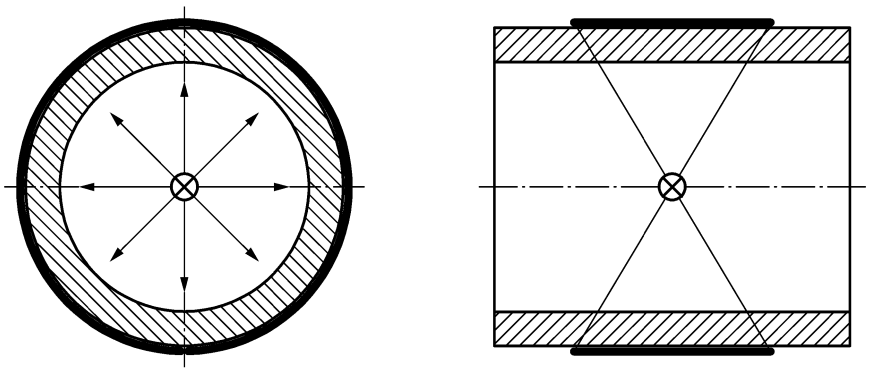

Figure 4 — Test arrangement for single wall penetration of curved areas with central positioning of the source on the concave side and film on the convex side of the test area

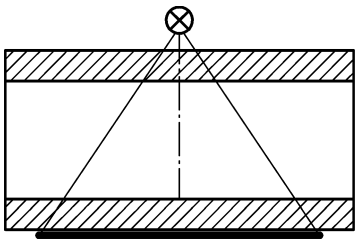

Figure 5 — Test arrangement for double wall penetration of plane or curved test areas; source and film outside the test area, only the film side wall imaged for evaluation

Sample Document
get full document from standards.iteh.ai

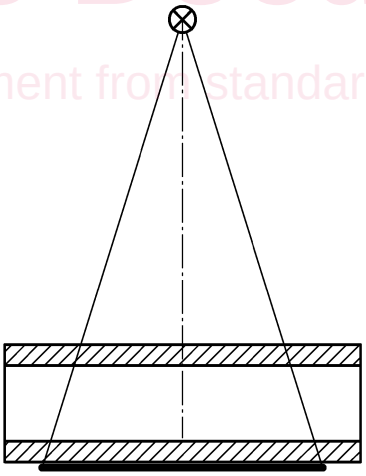

Figure 6 — Test arrangement for double wall penetration of plane or curved test areas; several exposures; source and film outside of the test area; both walls imaged for evaluation

SIST EN 12681-1:2027 • https://standards.iteh.ai/catalog/standards/sist/84aa68424bdd4665863b7d2eb06e53aa/sisten1268112027