SLOVENSKI STANDARD

SIST EN 14344

julij 2024

Izdelki za otroke – Otroški sedeži za kolesa – Varnostne zahteve in preskusne metode

Child care articles – Child seats for cycles – Safety requirements and test methods
Articles de puériculture – Sièges enfants pour bicyclettes – Exigences de sécurité et méthodes d'essai

Artikel für Säuglinge und Kleinkinder – Kindersitze für Fahrräder – Sicherheitstechnische Anforderungen und Prüfverfahren

SIST Preview
(https://ecommerce.sist.si)
SIST EN 14344:2024
https://ecommerce.sist.si/catalog/standards/sist/726d4e63-1152-4696-808c-872b25bb280f/sist-en-14344-2024

ICS 97.190

Referenčna oznaka
SIST EN 14344:2024 ((sl)en)

Nadaljevanje na straneh od II do III in od 1 do 80

© 2024-07 Standard je založil in izdal Slovenski inštitut za standardizacijo. Razmnoževanje celote ali delov tega standarda ni dovoljeno.

NACIONALNI UVOD

Standard SIST EN 14344 ((sl)en), Izdelki za otroke – Otroški sedeži za kolesa – Varnostne zahteve in preskusne metode, 2024, ima status slovenskega standarda in je po metodi ponatisa izvirnika z nacionalnim dodatkom privzet evropski standard EN 14344 (en), Child care articles – Child seats for cycles – Safety requirements and test methods, 2022.

Ta slovenski standard nadomešča slovenski standard SIST EN 14344:2005.

NACIONALNI PREDGOVOR

Evropski standard EN 14344:2022 je pripravil tehnični odbor Evropskega komiteja za standardizacijo CEN/TC 252 »Izdelki za otroke«, katerega sekretariat vodi AFNOR.

Ta dokument je bil pripravljen na podlagi mandata M/264, ki sta ga Evropska komisija in Evropsko združenje za prosto trgovino dodelila CEN.

Odločitev za izdajo tega standarda je 9. maja 2024 sprejel tehnični odbor SIST/TC OTR Izdelki za otroke.

SIST Preview
(https://ecommerce.sist.si)
SIST EN 14344:2024
https://ecommerce.sist.si/catalog/standards/sist/726d4e63-1152-4696-808c-872b25bb280f/sist-en-14344-2024

NACIONALNI DODATEK

Dodatek C
(informativni)

Prevodi opozoril v različne evropske jezike

V preglednici C.1, ki navaja prevode opozoril, navedenih v točkah 9.1.2.2, 9.1.2.3, 9.2.2.3, 9.3.2, se popravi slovenski prevod, in sicer:

Preglednica C.1 – Prevodi opozoril

Slovenian	
9.1.2.2	OPOZORILO! Zaradi varnostnih razlogov je sedež lahko nameščen samo na prtljažnike, ki so v skladu z EN ISO 11243:2016, označeni z nosilnostjo 27 kg.
9.1.2.3	OPOZORILO! Sedež, nameščen spredaj, ovira krmiljenje kolesa.
9.2.2.3 a)	OPOZORILO! Na nosilec otroškega sedeža ne nameščajte dodatne prtljage. Opozorilo mora vključevati priporočilo, da se prtljaga vedno namesti na nasprotnem koncu kolesa, kot je nameščen otroški sedež; npr. če je sedež zadaj, se uporablja sprednji prtljažnik
9.2.2.3 b)	OPOZORILO! Ne spreminjajte sedeža.
9.2.2.3 c)	OPOZORILO! Ko je otrok v sedežu, se odzivnost kolesa lahko spremeni. Še posebej to velja za ravnotežje, krmiljenje in zaviranje.
9.2.2.3 d)	OPOZORILO! Nikoli ne puščajte otroka v sedežu na parkiranem kolesu brez nadzora.
9.2.2.3 e)	OPOZORILO! Če se pojavijo kakršnekoli razpoke ali če površina sedeža začne razpadati, to pomeni, da je življenjska doba sedeža potekla in ga je treba zamenjati. V primeru dvoma se je treba obrniti na strokovnjaka.
9.2.2.3 f)	OPOZORILO! Pred uporabo vedno preverite temperaturo površine sedeža.
9.2.2.3 g)	OPOZORILO! Ko je sedež v naklonu, zagotovite, da je otrokova glava podprta.
9.2.2.3 h)	OPOZORILO! Sedež ni primeren za športne aktivnosti.
	Za sedež nameščen spredaj:
9.2.2.3 i)	OPOZORILO! Krmiljenje je zaradi sedeža lahko ovirano.
9.3.2	OPOZORILO! Dodatna varnostna oprema mora biti vedno pritrjena.

SIST Preview
(https://ecommerce.sist.si)
SIST EN 14344:2024
https://standards.iteh.ai/catalog/standards/sist/[illegible]280f/sist-en-14344-2024

ZVEZA Z NACIONALNIMI STANDARDI

S privzemom tega evropskega standarda veljajo za omejeni namen referenčnih standardov vsi standardi, navedeni v izvirniku, razen standardov, ki so že sprejeti v nacionalno standardizacijo:

SIST EN 71-1:2015+A1:2018	Varnost igrač – 1. del: Mehanske in fizikalne lastnosti (z dopolnili do vključno A3)
SIST EN 71-2:2021	Varnost igrač – 2. del: Vnetljivost
SIST EN 71-3:2019+A1:2021	Varnost igrač – 3. del: Migracija določenih elementov (vključno z dopolnilom A1)
SIST EN ISO 11243:2016	Kolesa – Prtljažniki za kolesa – Zahteve in preskusne metode (ISO 11243:2016)

OSNOVA ZA IZDAJO

– privzem standarda EN 14344:2022

PREDHODNE IZDAJE

– SIST EN 14344:2005

OPOMBE

– Povsod, kjer se v besedilu standarda uporablja izraz “evropski standard”, v SIST EN 14344:2024 to pomeni “slovenski standard”.

– Ta nacionalni dokument je istoveten EN 14344:2022 in je objavljen z dovoljenjem

Upravni center
CEN-CENELEC
Rue de la Science 23
B-1040 Bruselj

– This national document is identical with EN 14344:2022 and is published with the permission of

CEN-CENELEC
Management Centre
Rue de la Science 23
B-1040 Brussels

SIST Preview
(https://ecommerce.sist.si)

SIST EN 14344:2024
https://ecommerce.sist.si/catalog/standards/sist/726d4e63-1152-4696-808c-872b25bb280f/sist-en-14344-2024

SIST EN 14344:2024

EUROPEAN STANDARD
NORME EUROPÉENNE
EUROPÄISCHE NORM

EN 14344

June 2022

ICS 97.190

Supersedes EN 14344:2004

English Version

Child care articles - Child seats for cycles - Safety requirements and test methods

Articles de puériculture - Sièges enfants pour bicyclettes - Exigences de sécurité et méthodes d'essai

Artikel für Säuglinge und Kleinkinder - Kindersitze für Fahrräder - Sicherheitstechnische Anforderungen und Prüfverfahren

This European Standard was approved by CEN on 27 March 2022.

CEN members are bound to comply with the CEN/CENELEC Internal Regulations which stipulate the conditions for giving this European Standard the status of a national standard without any alteration. Up-to-date lists and bibliographical references concerning such national standards may be obtained on application to the CEN-CENELEC Management Centre or to any CEN member.

This European Standard exists in three official versions (English, French, German). A version in any other language made by translation under the responsibility of a CEN member into its own language and notified to the CEN-CENELEC Management Centre has the same status as the official versions.

CEN members are the national standards bodies of Austria, Belgium, Bulgaria, Croatia, Cyprus, Czech Republic, Denmark, Estonia, Finland, France, Germany, Greece, Hungary, Iceland, Ireland, Italy, Latvia, Lithuania, Luxembourg, Malta, Netherlands, Norway, Poland, Portugal, Republic of North Macedonia, Romania, Serbia, Slovakia, Slovenia, Spain, Sweden, Switzerland, Turkey and United Kingdom.

SIST Preview
SIST EN 14344:2024
https://ecommerce.sist.si/catalog/standards/sist/726d4e63-1152-4696-808c-872b25bb280f/sist-en-14344-2024



EUROPEAN COMMITTEE FOR STANDARDIZATION
COMITÉ EUROPÉEN DE NORMALISATION
EUROPÄISCHES KOMITEE FÜR NORMUNG

CEN-CENELEC Management Centre: Rue de la Science 23, B-1040 Brussels

© 2022 CEN All rights of exploitation in any form and by any means reserved worldwide for CEN national Members.

Ref. No. EN 14344:2022 E

SIST EN 14344:2024

Contents

Page

European foreword ... 4

1 Scope ... 5

2 Normative references ... 5

3 Terms and definitions ... 5

4 General requirements and test conditions ... 8
4.1 General requirement and seat classification ... 8
4.2 Additional requirements for front seats ... 9
4.3 Additional requirements for rear seats attached to rear luggage carriers ... 9
4.4 Principle of the most onerous condition ... 9
4.5 Tolerances and test conditions ... 9
4.6 Order of tests ... 10

5 Test equipment ... 10
5.1 Test probes ... 10
5.1.1 Finger probes ... 10
5.1.2 Conical probes ... 11
5.2 Angle and protected volume measurement device ... 12
5.3 Test bench ... 12
5.4 Foot blocks ... 12
5.5 Small part cylinders ... 13
5.6 Feeler gauge ... 13
5.7 Clamps ... 14
5.8 Test equipment for strength and durability ... 14
5.8.1 Lateral dynamic test apparatus ... 14
5.8.2 Limiting device ... 14
5.9 Test bags ... 15
5.10 Test dummy for roll-over test ... 16

6 Chemical hazards ... 16

7 Thermal hazards ... 16

8 Mechanical hazards ... 17
8.1 Determination of the protected volume ... 17
8.2 Hazards from gaps and openings – finger and foot entrapment ... 18
8.2.1 Requirements ... 18
8.2.2 Test method ... 19
8.3 Hazards due to edges and protrusion ... 20
8.3.1 Requirements ... 20
8.3.2 Test method ... 20
8.4 Hazards due to moving parts, i.e. shearing and compression ... 20
8.4.1 Requirements ... 20
8.4.2 Specific hazard due to elasticity of the seat within the protected volume ... 20
8.5 Hazards due inadvertent release of the reclining function ... 20
8.5.1 General ... 20
8.5.2 Unintentional release of locking mechanism(s) ... 21
8.5.3 Hazards due inadvertent release of the attachment system of the seat on bicycle ... 21
8.5.4 Hazards due removable foot guards ... 21

SIST Preview
(https://ecommerce.sist.si)
SIST EN 14344:2024
https://standards.iteh.ai/catalog/standards/sist/726d4e63-1152-4696-808c-872b25bb280f/sist-en-14344-2024

SIST EN 14344:2024

8.6 Suffocation hazard due to plastic packaging **22**
8.7 Entanglement hazards **22**
8.7.1 Requirements **22**
8.7.2 Test method **23**
8.8 Choking / ingestion hazards – Small parts **23**
8.8.1 Requirements **23**
8.8.2 Test method **24**
8.9 Hazards from inadequate structural integrity **24**
8.9.1 Requirements for strength and durability **24**
8.9.2 Mounting method for strength and durability for luggage and non-luggage carrier seats **25**
8.9.3 Test methodology for strength and durability **25**
8.10 Hazards from inadequate protective function **29**
8.10.1 General **29**
8.10.2 Requirements for seating area and footrests **29**
8.10.3 Protection for feet **30**
8.10.4 Seat width requirement and test method for all seats **31**
8.10.5 Minimum range of footrest adjustment (height) **31**
8.10.6 Foot retention with straps **33**
8.10.7 Lateral seat protection **34**
8.10.8 Seat and backrest angle **35**
8.10.9 Restraint system **37**

9 Product information **40**
9.1 Purchase information **40**
9.1.1 General requirements for purchase information **40**
9.1.2 Specific purchase information **40**
9.2 Instructions for use **41**
9.2.1 General **41**
9.2.2 Specific instructions for mounting and use **41**
9.3 Marking **43**
9.3.1 General requirements for marking **43**
9.3.2 Marking requirements for rear seats attached to luggage carriers **45**
9.3.3 Marking, test method **45**

Annex A (normative) **Measuring device** **46**

Annex B (normative) **Foot blocks A and B** **64**

B.1 General **64**

Annex C (informative) **Translation of Warnings in different European languages** **67**

Annex D (informative) **A–deviation** **72**

Annex E (informative) **Rationales** **73**

E.1 General **73**

E.2 Chemical hazards **73**

E.3 Thermal hazards **73**

E.4 Mechanical hazards **73**

Annex ZA (informative) **Relationship between this European Standard and the safety requirements of Directive 2001/95/EC aimed to be covered** **77**

Bibliography **80**

SIST Preview
(https://ecommerce.sist.si)
SIST EN 14344:2024

SIST EN 14344:2024

European foreword

This document (EN 14344:2022) has been prepared by Technical Committee CEN/TC 252 “Child care articles”, the secretariat of which is held by AFNOR.

This European Standard shall be given the status of a national standard, either by publication of an identical text or by endorsement, at the latest by December 2022, and conflicting national standards shall be withdrawn at the latest by December 2022.

Attention is drawn to the possibility that some of the elements of this document may be the subject of patent rights. CEN shall not be held responsible for identifying any or all such patent rights.

This document supersedes EN 14344:2004.

In comparison with the previous edition, the following significant changes have been made:

— complete review of the standard in a hazard-based format;

— alignment with the common practices applied in other technical groups of CEN/TC 252 (hazards from gaps and openings – finger entrapment, entanglement hazards…);

— definition of a new protected volume;

— inclusion of specific requirements for specific seats with a reclining function;

— improvement of the measuring device;

— introduction of a new test method for the protection for feet;

— introduction of a new test method for footrest adjustment;

— introduction of a new test method for the measurement of the angle of the backrest.

SIST Preview
(https://ecommerce.sist.si)
SIST EN 14344:2024
https://ecommerce.sist.si/catalog/standards/sist/726d4e63-1152-4696-808c-872b25bb280f/sist-en-14344-2024

This document has been prepared under a Standardization Request given to CEN by the European Commission and the European Free Trade Association, and supports essential requirements of EU Directive(s).

For relationship with EU Directive(s), see informative Annex ZA, which is an integral part of this document.

Any feedback and questions on this document should be directed to the users’ national standards body. A complete listing of these bodies can be found on the CEN website.

According to the CEN-CENELEC Internal Regulations, the national standards organisations of the following countries are bound to implement this European Standard: Austria, Belgium, Bulgaria, Croatia, Cyprus, Czech Republic, Denmark, Estonia, Finland, France, Germany, Greece, Hungary, Iceland, Ireland, Italy, Latvia, Lithuania, Luxembourg, Malta, Netherlands, Norway, Poland, Portugal, Republic of North Macedonia, Romania, Serbia, Slovakia, Slovenia, Spain, Sweden, Switzerland, Turkey and the United Kingdom.

SIST EN 14344:2024

1 Scope

This document specifies requirements for child seats intended to be mounted on cycles and electrical power assisted cycles with a cut off speed of up to 25 km/h (i.e. according to EN 15194), their attachment system and accessories intended to be attached to the seat in order to transport children with a weight from 9 kg up to 22 kg and who are capable of sitting unaided.

NOTE 1 Some European countries have special legislation for child seats for cycles. Compliance with this document might not meet this legislation.

NOTE 2 Where a child seat or any part of the child seat has several functions or can be converted into another function, other relevant standards might be applicable.

NOTE 3 Additional rationales are presented in Annex E for inclusion of some of the requirements given in this document.

2 Normative references

The following documents are referred to in the text in such a way that some or all of their content constitutes requirements of this document. For dated references, only the edition cited applies. For undated references, the latest edition of the referenced document (including any amendments) applies.

EN 71-1:2014+A1:2018, *Safety of toys — Part 1: Mechanical and physical properties*

EN 71-2:2020, *Safety of toys — Part 2: Flammability*

EN 71-3:2019+A1:2021, *Safety of toys — Part 3: Migration of certain elements*

EN ISO 11243:2016, *Cycles — Luggage carriers for bicycles — Requirements and test methods (ISO 11243:2016)*

SIST Preview
(https://ecommerce.sist.si)
SIST EN 14344:2024
https://ecommerce.sist.si/catalog/standards/sist/726d4e63-1152-4696-808c-872b25bb280f/sist-en-14344-2024

3 Terms and definitions

For the purposes of this document, the following terms and definitions apply.

ISO and IEC maintain terminological databases for use in standardization at the following addresses:

— ISO Online browsing platform: available at https://www.iso.org/obp

— IEC Electropedia: available at https://www.electropedia.org/

3.1
seat
child seat intended to be mounted on a cycle

3.2
front seat
child *seat* intended to be mounted on a cycle in front of the rider (between handlebar of the cycle and rider)

3.3
rear seat
child *seat* intended to be mounted on a cycle behind the rider

SIST EN 14344:2024

3.4
reclining seat
front or rear *seat* that can transport a child either in an upright or in a reclined sitting position

3.5
guard
device that reduces or prevents physical access to a hazard zone by closing off access to an area containing one or more hazards

3.6
removable foot guard
guard that is always provided with the *seat*, or pre-assembled with, and can be removed

3.7
reference plane
plane defined by the top surface of the base plate of the measuring device

Note 1 to entry: See Figure A.2 (key 17).

3.8
attachment system
structure to attach the child *seat* to the cycle

3.9
footrest
structure to support the child's foot

SIST Preview
(https://ecommerce.sist.si)

3.10
protected volume
volume accessible by the child, when sitting and restrained in the *seat*, where specific safety requirements are necessary

https://ecommerce.sist.si/catalog/standards/sist/726d4e63-1152-4696-808c-872b25bb280f/sist-en-14344-2024

3.11
handlebar and handlebar stem assembly
3.11.1
handlebar
part held by rider

Note 1 to entry: See Figure 1.

3.11.2
extension
part of the handlebar stem that positions the handlebar in front of the steering axis

Note 1 to entry: See Figure 1.

3.11.3
quill
part of some designs of the handlebar stem, that is co-axial with the steering axis and that fits partly into the fork steering tube

Note 1 to entry: See Figure 1.

SIST EN 14344:2024

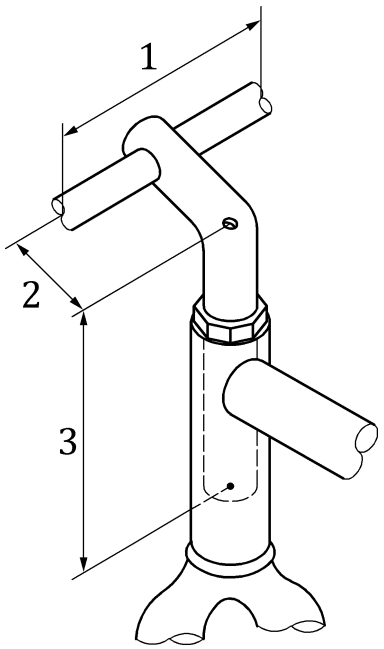

Key

1 handlebar
2 extension
3 quill

Figure 1 — Handlebar and handlebar stem assembly

SIST Preview
(https://ecommerce.sist.si)

3.12
restraint system
device designed to restrain the child in a sitting and safe position

SIST EN 14344:2024
https://ecommerce.sist.si/catalog/standards/sist/726d4e63-1152-4696-808c-872b25bb280f/sist-en-14344-2024

3.13
crotch restraint
device designed to pass between the child's legs to prevent the child from sliding forward

3.14
cycle
vehicle that has at least two wheels and is propelled solely or mainly by the muscular energy of the person on that vehicle, in particular by means of pedals

[SOURCE: EN ISO 4210-1:2014, 2.4]

3.15
accessories
additional element attached directly to the child *seat* or to the attachment system

Note 1 to entry: The following are not considered as accessories: footrest, restraint system, integral and additional guard, attachment system.

3.16
headrest
postural support device intended to support the head

SIST EN 14344:2024

3.17
plastic sheeting
thin section plastic sheeting which is used as part of the *seat* or as part of the packaging

Note 1 to entry: Decals are covered by this definition.

[SOURCE: Modified from EN 71-1:2014+A1:2018, 3.52]

3.18
operating device
part of the *locking mechanism(s*) designed to be activated by the rider through one or several action(s)

3.19
locking mechanism
assembly of components consisting of one or more *locking device(s)* and *one or more operating device(s)*

3.20
locking device
mechanical component that maintains part(s) of the bicycle seat erected in the position of use (e.g. latch(es), hooks, over centre lock...) which could be deactivated or activated by action(s) on the *operating device*

[SOURCE: EN 1888-1:2018, 3.20]

3.21
lateral protection
part of the bicycle *seat* designed to provide sufficient armrest in order to secure the child sideways

SIST Preview
(https://ecommerce.sist.si)

4 General requirements and test conditions

SIST EN 14344:2024
https://ecommerce.sist.si/catalog/standards/sist/20ad1c63-1152-4696-808c-872b25bb280f/sist-en-14344-2024

4.1 General requirement and seat classification

Seats are classified according to the weight and height of the child carried and their mounting position on the cycle (see Table 1).

Table 1 — Classification of seats

Type of seat	Height/Weight range	
	9 kg to 15 kg	9 kg to 22 kg
Rear seat	A15	A22
Front seat between handlebar of the cycle and rider	C15	Not permitted
Maximum standing height of the child	930 mm	1 100 mm
Front seat in front of handlebar of the cycle	Not permitted	Not permitted

EXAMPLE Designation of a seat to be mounted behind the rider (A), maximum load 15 kg (15): Child seat A15.

SIST EN 14344:2024

4.2 Additional requirements for front seats

Front seats shall not be attached to the handlebar of the cycle or the extension of the handlebar as defined in 3.11.

NOTE Additional regulations could apply on the location of the attachment of the seat on the bicycle (e.g. German and Austrian road traffic regulations).

Front seats class C15 can be attached between handlebar of the cycle and rider. It is not permitted to attach any front seat in front of handlebar of the cycle.

4.3 Additional requirements for rear seats attached to rear luggage carriers

Rear seats that are fixed to the rear luggage carrier shall have an additional retention system, not removable from the seat, which shall be attached to another part of the cycle and limits rearward movement of the seat. The rearward displacement shall not be greater than 50 mm and angular displacement shall not be greater than 15° in rearward direction. Where additional retention system is provided with the seat it shall withstand a tensile force of twice the maximum allowable weight of the child plus the weight of the seat. Additionally, it shall have a system for securing the free end of the strap (in order to avoid it to be caught in the wheel).

4.4 Principle of the most onerous condition

Installation and adjustment of the seat during the test shall be conducted according to the instructions for use.

It is allowed to use any cycle that is suitable according to the instructions for use.

Unless otherwise stated each test shall be conducted with the child seat in the most onerous condition for that test in terms of:

— the addition (or not) of any other accessories supplied or recommended by the manufacturer for use with the child seat and with accessories loaded according to the manufacturer's instructions;

— the adjustment of the child seat, and any other adjustable features (e.g. reclined backrest) or accessories, or any other optional arrangement of the child seat allowed in the manufacturer's instructions or otherwise approved by the manufacturer;

— any removable padding shall be installed during the measurements.

NOTE The heaviest loads do not always produce the most onerous conditions.

4.5 Tolerances and test conditions

Unless otherwise stated the following accuracies shall be used:

All forces shall have an accuracy of ±5 %.

All masses shall have an accuracy of ±1 %.

All dimensions shall have an accuracy of ±1,0 mm.

All time measurements shall have an accuracy of ±1 s.

All angles shall have an accuracy of ±1°.

All frequencies, amplitudes shall have an accuracy of ±5 %.

The seat shall be conditioned at a temperature of (23 ± 5) °C for at least 2 h prior to test. All tests shall be carried out at a temperature of (23 ± 5) °C unless otherwise specified.

SIST Preview
(https://ecommerce.sist.si)
https://ecommerce.sist.si/catalog/standards/sist/726d4e63-1152-4696-808c-872b25bb280f/sist-en-14344-2024

SIST EN 14344:2024

4.6 Order of tests

Tests from 8 shall be carried out on the same sample in the order that they appear. A separate sample may be used for all other tests.

5 Test equipment

5.1 Test probes

5.1.1 Finger probes

5.1.1.1 Finger probe with hemispherical end

Probes made from plastics or other hard, smooth material of diameter $7\ ^{0}_{-0,1}$ mm, with a full hemispherical end (see Figure 2).

Dimensions in millimetres

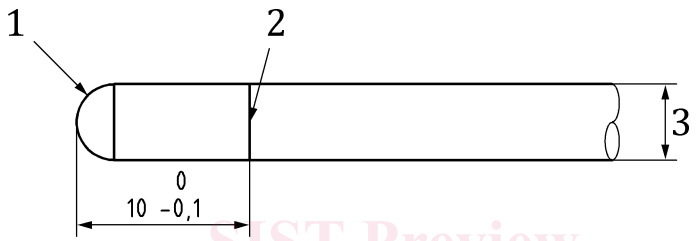

SIST Preview
(https://ecommerce.sist.si)

Key

1 R 3,5
2 line scribed around circumference showing depth of penetration
3 Ø ($7\ ^{0}_{-0,1}$)

SIST EN 14344:2024
https://ecommerce.sist.si/catalog/standards/sist/726d4e63-1152-4696-808c-872b25bb280f/sist-en-14344-2024

Figure 2 — 7 mm probe