INTERNATIONAL STANDARD

ISO 4695

Fifth edition
2021-10

Iron ores for blast furnace feedstocks — Determination of the reducibility by the rate of reduction index

Minerais de fer pour charges de hauts fourneaux — Détermination de la réductibilité à partir de la vitesse de réduction

SIST Preview
(https://ecommerce.sist.si)

ISO 4695:2021
https://ecommerce.sist.si/catalog/standards/iso/63e1d94f-6d99-4b34-8e36-797ac2a15cd2/iso-4695-2021

Reference number
ISO 4695:2021(E)

© ISO 2021

SIST Preview
(https://ecommerce.sist.si)

ISO 4695:2021
https://ecommerce.sist.si/catalog/standards/iso/63e1d94f-6d99-4b34-8e36-797ac2a15cd2/iso-4695-2021



COPYRIGHT PROTECTED DOCUMENT

© ISO 2021

All rights reserved. Unless otherwise specified, or required in the context of its implementation, no part of this publication may be reproduced or utilized otherwise in any form or by any means, electronic or mechanical, including photocopying, or posting on the internet or an intranet, without prior written permission. Permission can be requested from either ISO at the address below or ISO's member body in the country of the requester.

ISO copyright office
CP 401 • Ch. de Blandonnet 8
CH-1214 Vernier, Geneva
Phone: +41 22 749 01 11
Email: copyright@iso.org
Website: www.iso.org

Published in Switzerland

© ISO 2021 – All rights reserved

Contents

Page

Foreword ... **iv**
Introduction ... **v**
1 Scope ... **1**
2 Normative references ... **1**
3 Terms and definitions ... **1**
4 Principle ... **1**
5 Sampling, sample preparation and preparation of test portions ... **2**
5.1 Sampling and sample preparation ... 2
5.2 Preparation of test portions ... 2
6 Apparatus ... **2**
7 Test conditions ... **5**
7.1 General ... 5
7.2 Reducing gas ... 5
7.2.1 Composition ... 5
7.2.2 Purity ... 5
7.2.3 Flow rate ... 5
7.3 Heating and cooling gas ... 5
7.4 Temperature of the test portion ... 6
8 Procedure ... **6**
8.1 Number of determinations for the test ... 6
8.2 Chemical analysis ... 6
8.3 Reduction ... 6
9 Expression of results ... **7**
9.1 Calculation of the reducibility index ... 7
9.2 Repeatability and acceptance of test results ... 8
10 Test report ... **8**
11 Verification ... **8**
Annex A (normative) **Flowsheet of the procedure for the acceptance of test results** ... **10**
Annex B (informative) **Derivation of equation for reducibility** ... **11**

SIST Preview
(https://ecommerce.sist.si)
https://ecommerce.sist.si/catalog/standards/sist/4b34-8e36-797ac2a15cd2/iso-4695-2021

© ISO 2021 – All rights reserved

Foreword

ISO (the International Organization for Standardization) is a worldwide federation of national standards bodies (ISO member bodies). The work of preparing International Standards is normally carried out through ISO technical committees. Each member body interested in a subject for which a technical committee has been established has the right to be represented on that committee. International organizations, governmental and non-governmental, in liaison with ISO, also take part in the work. ISO collaborates closely with the International Electrotechnical Commission (IEC) on all matters of electrotechnical standardization.

The procedures used to develop this document and those intended for its further maintenance are described in the ISO/IEC Directives, Part 1. In particular, the different approval criteria needed for the different types of ISO documents should be noted. This document was drafted in accordance with the editorial rules of the ISO/IEC Directives, Part 2 (see www.iso.org/directives).

Attention is drawn to the possibility that some of the elements of this document may be the subject of patent rights. ISO shall not be held responsible for identifying any or all such patent rights. Details of any patent rights identified during the development of the document will be in the Introduction and/or on the ISO list of patent declarations received (see www.iso.org/patents).

Any trade name used in this document is information given for the convenience of users and does not constitute an endorsement.

For an explanation of the voluntary nature of standards, the meaning of ISO specific terms and expressions related to conformity assessment, as well as information about ISO's adherence to the World Trade Organization (WTO) principles in the Technical Barriers to Trade (TBT), see www.iso.org/iso/foreword.html.

SIST Preview
(https://standards.iteh.ai)

This document was prepared by Technical Committee ISO/TC 102, *Iron ore and direct reduced iron*, Subcommittee SC 3, *Physical testing*.

This fifth edition cancels and replaces the fourth edition (ISO 4695:2015), of which it constitutes a minor revision to correct Formula B.3 in Annex B.

https://standards.iteh.ai/catalog/standards/sist/63e1d94f-6d99-4b34-8e36-797ac2a15cd2/iso-4695-2021

Any feedback or questions on this document should be directed to the user's national standards body. A complete listing of these bodies can be found at www.iso.org/members.html.

© ISO 2021 – All rights reserved

Introduction

This document concerns one of a number of physical test methods that have been developed to measure various physical parameters and to evaluate the behaviour of iron ores, including reducibility, disintegration, crushing strength, apparent density, etc. This method was developed to provide a uniform procedure, validated by collaborative testing, to facilitate comparisons of tests made in different laboratories.

The results of this test have to be considered in conjunction with other tests used to evaluate the quality of iron ores as feedstocks for blast furnace processes.

This document can be used to provide test results as part of a production quality control system, as a basis of a contract or as part of a research project.

SIST Preview
(https://ecommerce.sist.si)
ISO 4695:2021
https://ecommerce.sist.si/catalog/standards/iso/63e1d94f-6d99-4b34-8e36-797ac2a15cd2/iso-4695-2021

© ISO 2021 – All rights reserved

SIST Preview
(https://ecommerce.sist.si)

ISO 4695:2021
https://ecommerce.sist.si/catalog/standards/iso/63e1d94f-6d99-4b34-8e36-797ac2a15cd2/iso-4695-2021

Iron ores for blast furnace feedstocks — Determination of the reducibility by the rate of reduction index

CAUTION — This document can involve hazardous operations and equipment. This document does not purport to address all of the safety issues associated with its use. It is the responsibility of the user of this document to establish appropriate safety and health practices and determine the applicability of regulatory limitations prior to its use.

1 Scope

This document specifies a method to provide a relative measure for evaluating the extent to and ease with which oxygen can be removed from iron ores, when reduced under conditions resembling those prevailing in the reduction zone of a blast furnace.

This document is applicable to lump ores, sinters and hot-bonded pellets.

2 Normative references

The following documents are referred to in the text in such a way that some or all of their content constitutes requirements of this document. For dated references, only the edition cited applies. For undated references, the latest edition of the referenced document (including any amendments) applies.

SIST Preview
(https://ecommerce.sist.si)

ISO 2597-1, *Iron ores — Determination of total iron content — Part 1: Titrimetric method after tin(II) chloride reduction*

ISO 2597-2, *Iron ores — Determination of total iron content — Part 2: Titrimetric methods after titanium(III) chloride reduction*

ISO 4695:2021
https://ecommerce.sist.si/catalog/standards/iso/63e1d94f-6d99-4b34-8e36-797ac2a15cd2/iso-4695-2021

ISO 3082, *Iron ores — Sampling and sample preparation procedures*

ISO 9035, *Iron ores — Determination of acid-soluble iron(II) content — Titrimetric method*

ISO 11323, *Iron ore and direct reduced iron — Vocabulary*

3 Terms and definitions

For the purposes of this document, the terms and definitions given in ISO 11323 apply.

ISO and IEC maintain terminology databases for use in standardization at the following addresses:

— ISO Online browsing platform: available at https://www.iso.org/obp

— IEC Electropedia: available at https://www.electropedia.org/

4 Principle

The test portion is isothermally reduced in a fixed bed, at 950 °C, using a reducing gas consisting of CO and N_2, and the mass loss of the test portion is recorded continuously or at specified time intervals until its degree of reduction reaches 65 %. The rate of reduction is calculated at the oxygen/iron ratio of 0,9.

© ISO 2021 – All rights reserved

5 Sampling, sample preparation and preparation of test portions

5.1 Sampling and sample preparation

Sampling of a lot and preparation of a test sample shall be in accordance with ISO 3082.

The size range for pellets, sinters and lump ores shall be –12,5 mm + 10,0 mm.

A test sample of at least 2,5 kg, on a dry basis, of the sized material shall be obtained.

Oven-dry the test sample to constant mass at 105 °C ± 5 °C and cool it to room temperature before preparation of the test portions.

NOTE Constant mass is achieved when the difference in mass between two subsequent measurements becomes less than 0,05 % of the initial mass of the test sample.

5.2 Preparation of test portions

Collect each test portion by taking ore particles at random.

NOTE Manual methods of division recommended in ISO 3082, such as riffling, can be applied to obtain the test portions.

At least five test portions, each of approximately 500 g (± the mass of one particle) shall be prepared from the test sample: four test portions for testing and one for chemical analysis.

Weigh the test portions to the nearest 1 g and register the mass of each test portion on its recipient label.

SIST Preview
(https://ecommerce.sist.si)

6 Apparatus

ISO 4695:2021
https://ecommerce.sist.si/catalog/standards/iso/63e1d94f-6d99-4b34-8e36-797ac2a15cd2/iso-4695-2021

6.1 The test apparatus shall comprise the following:

a) ordinary laboratory equipment, such as an oven, hand tools, a time-control device and safety equipment;

b) reduction tube assembly;

c) furnace, equipped with a balance for permitting the mass loss of the test portion to be read at any time during the test;

d) system to supply the gases and regulate the flow rates;

e) weighing device.

Figure 1 shows an example of the test apparatus.

6.2 Reduction tube, made of non-scaling, heat-resistant metal to withstand temperatures higher than 950 °C and resistant to deformation. The internal diameter shall be 75 mm ± 1 mm. A removable perforated plate, made of non-scaling, heat-resistant metal to withstand temperatures higher than 950 °C, shall be mounted in the reduction tube to support the test portion and to ensure uniform gas flow through it. The perforated plate shall be 4 mm thick, with its diameter 1 mm less than the internal diameter of the tube. The holes in the plate shall be 2 mm to 3 mm in diameter at a pitch centre distance of 4 mm to 5 m.

Figure 2 shows an example of a reduction tube.

© ISO 2021 – All rights reserved

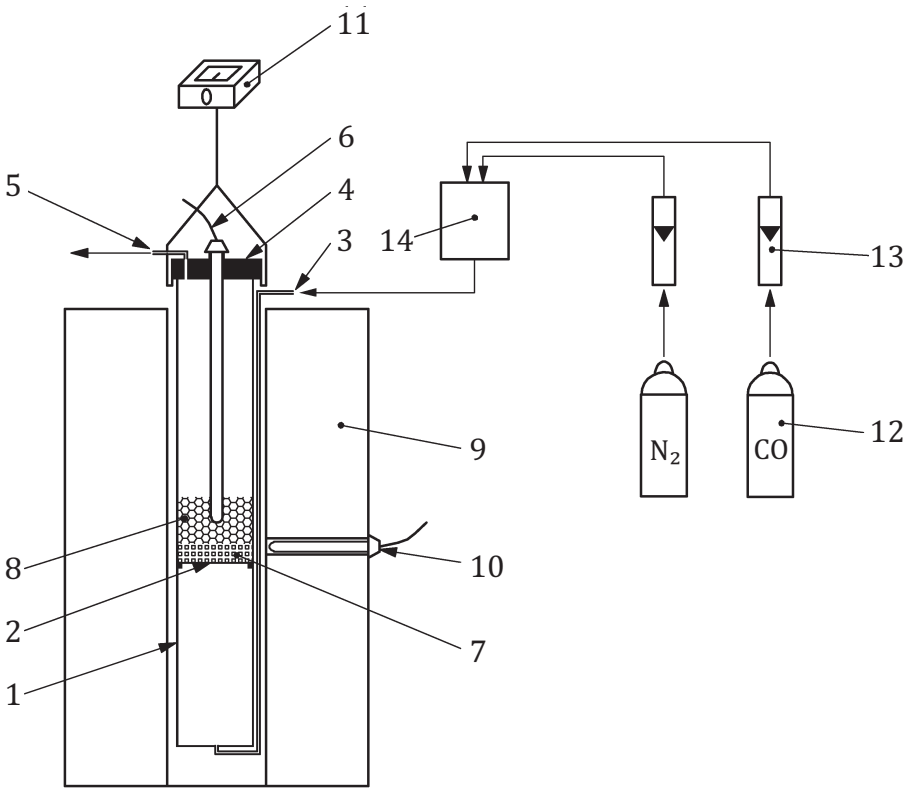

Key

Reduction tube

1 reduction tube
2 perforated plate
3 gas inlet
4 lid
5 gas outlet
6 thermocouple for measuring the reduction temperature
7 porcelain ball layer
8 test portion

Furnace

9 electrically heated furnace
10 thermocouple for temperature regulation of furnace
11 balance

Gas supply system

12 gas cylinder
13 gas flow meters
14 mixing vessel

Figure 1 — Example of test apparatus (schematic diagram)

SIST Preview
(https://ecommerce.sist.si)
ISO 4695:2021
https://ecommerce.sist.si/catalog/standards/iso/63e1d94f-6d99-4b34-8e36-797ac2a15cd2/iso-4695-2021

© ISO 2021 – All rights reserved

Dimensions in millimetres

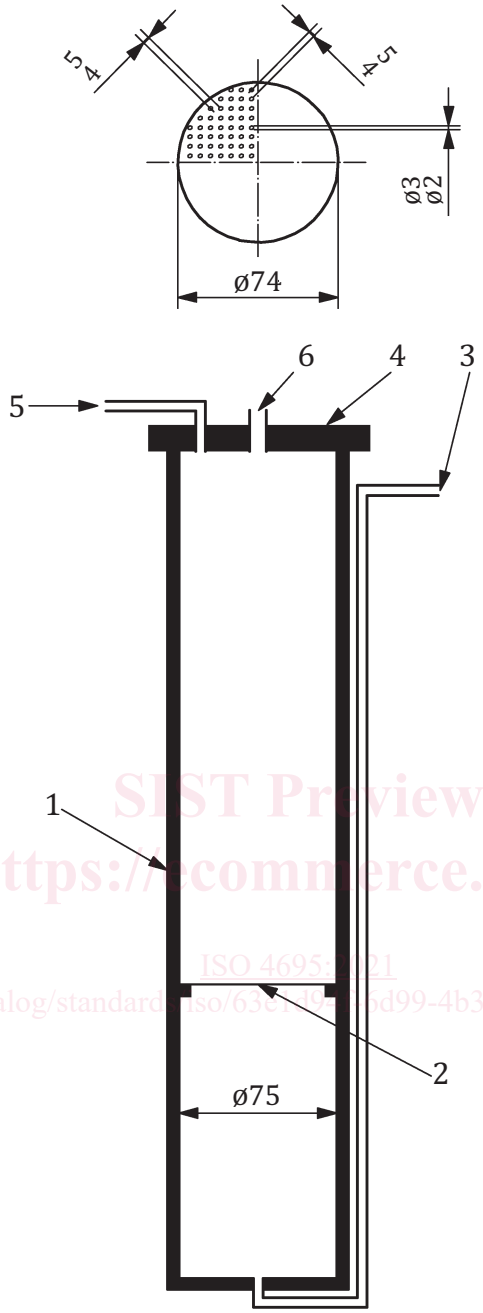

SIST Preview
(https://ecommerce.sist.si)
ISO 4695:2021
https://ecommerce.sist.si/catalog/standards/iso/63e1d9...6d99-4b34-8e36-797ac2a15cd2/iso-4695-2021

Key

1 reduction tube
2 perforated plate
3 opening for gas inlet
4 lid
5 opening for gas outlet
6 opening for thermocouple insertion

NOTE Dimensions not specified in Clause 6 are shown for information only.

Figure 2 — Example of reduction tube (schematic diagram)

© ISO 2021 – All rights reserved